CABLE-25/8/250/PSR-M/001/L - Adapter cable

1571214

https://www.phoenixcontact.com/gb/products/1571214

Please be informed that the data shown in this PDF document is generated from our online catalog. Please find the complete data in the user documentation. Our general terms of use for downloads are valid.

Cable adapter for PSRmodular (PSR-M-EM...), 25/8-pos., cable entry on the left, cable length 2.5 m



Commercial data

Item number	1571214
Packing unit	1 pc
Minimum order quantity	1 pc
Sales key	DNA366
Product key	DNA366
GTIN	4067923059047
Weight per piece (including packing)	186.8 g
Weight per piece (excluding packing)	186 g
Customs tariff number	85444290
Country of origin	IT

Technical data

Notes

Note on application

Note on application	Only for industrial use

Product properties

Product type	Adapter cable

Connection data

To the device

Connection method	RJ45

Encoder / PLC

Connection method	D-SUB-25 male/D-SUB-25 female
Number of positions	25

Material specifications

Outer sheath, material	PVC
Conductor material	Bare Cu litz wires

Cable/line

Cable length	2.5 m
Outer sheath, material	PVC
External sheath, color	green (RAL 6016)
Cable cross section	0.48 mm² (AWG 26)
Conductor material	Bare Cu litz wires
Shielding	Plastic-coated aluminum foil, tinned copper braided shield
	Soldering on D-SUB housing
Cable resistance	≤ 144 Ω/km (Loop)

Environmental and real-life conditions

Ambient conditions

Ambient temperature (operation)	-30 °C ... 80 °C (for fixed installation)

Drawings

Schematic diagram

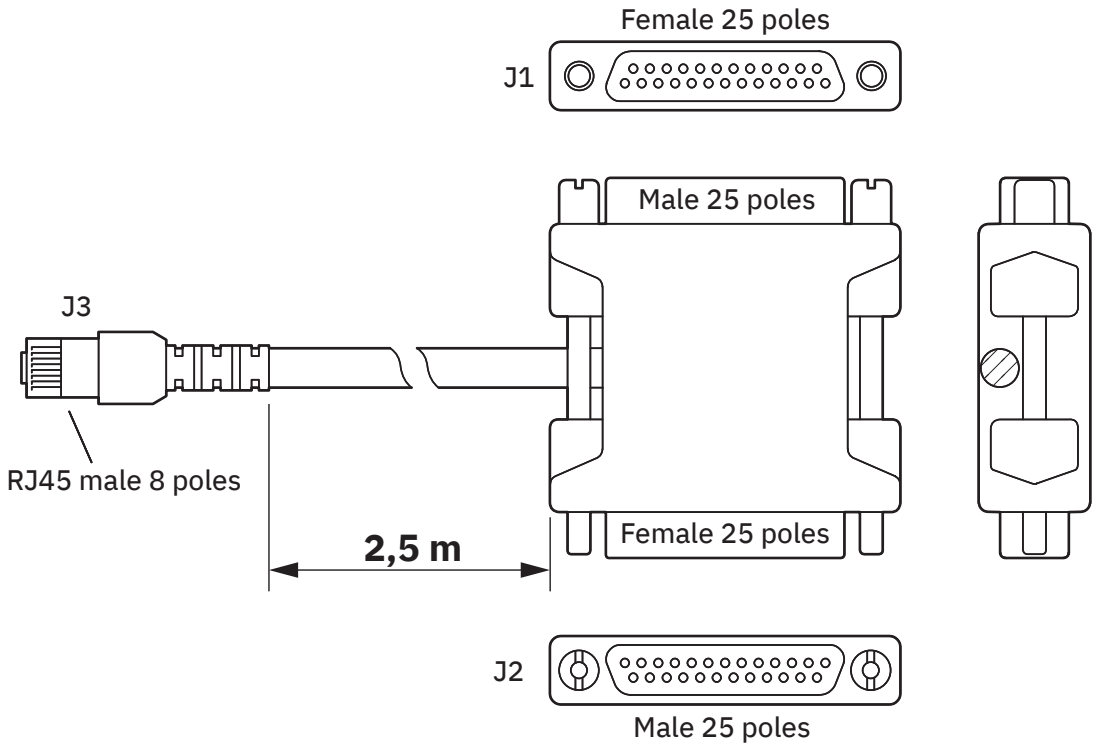

Classifications

ECLASS

ECLASS-13.0	27371390
ECLASS-15.0	27371390

ETIM

ETIM 10.0	EC002498

Environmental product compliance

EU RoHS

Fulfills EU RoHS substance requirements	Yes, No exemptions

China RoHS

Environment friendly use period (EFUP)	EFUP-E
	No hazardous substances above the limits

EU REACH SVHC

REACH candidate substance (CAS No.)	No substance above 0.1 wt%

EF3.1 Climate Change

CO2e kg	13.565 kg CO2e

Phoenix Contact 2026 © - all rights reserved
https://www.phoenixcontact.com

PHOENIX CONTACT Ltd
Halesfield 13, Telford
Shropshire, TF7 4PG
01952 681700
info@phoenixcontact.co.uk