WIL-RM-S-P - Sensor

1534629

https://www.phoenixcontact.com/gb/products/1534629

Please be informed that the data shown in this PDF document is generated from our online catalog. Please find the complete data in the user documentation. Our general terms of use for downloads are valid.



Sensor for measuring loads on the rotor blade of a wind turbine generator, IO-Link communication, can be stood on, screw mounting to mounting kit. Mounting kit can be ordered separately (see accessories). App required for operation (see “Product description”).

Product description

The sensor with integrated strain gauge is an essential component for load monitoring (RM-S) on rotor blades of wind turbine generators.

Using the RM-S, actual loads and bending moments in the rotor blade can be measured and continuously monitored. This enables the load-optimized control of the generator and increases the service life of the rotor blade. Changes in the material structure of the rotor blade can be detected at an early stage and examined more closely to avoid major repairs as well as consequential damage.

The sensor is mounted on the inside of the rotor blade. IO-Link is used for communication to the higher-level controller. The WIL-RM-S-MP mounting kit is required for mounting (see accessories). Four sensors and four mounting kits are required for each rotor blade.

The sensor is part of the Blade Intelligence rotor blade monitoring system product portfolio for wind turbine generators.

The system essentially consists of sensors for ice detection, load monitoring, lightning current measurement, and structural health monitoring, which were specially developed for use on the rotor blade. The modular design allows the individual solutions to be combined as needed based on requirements. Depending on the sensor, the sensor data is transmitted to a common evaluation unit either via the IO-Link communication module or via a direct connection. The evaluation unit is available as a ready-to-use switchgear and controlgear assembly (see accessories). For alternatives to the ready-to-use switchgear and controlgear assembly solution, please contact your Phoenix Contact subsidiary.

The Blade Intelligence rotor blade monitoring system can also be reliably integrated into existing systems.

IMPORTANT NOTE

Several apps, some of which are subject to a fee, are required to operate the product. You can purchase and download the apps in the PLCnext Store.
• BI Framework (free)
• BI Framework by WOELFEL (free)
• BI Load Detection RMS

Your advantages

- Quick and easy startup
- Increased system efficiency through load-optimized control
- Increased system safety through proactive monitoring of the rotor blade
- Predictable repairs thanks to early warnings in the event of problems
- Cost reduction by avoiding longer system downtimes
- Can be used in combination with other sensors from the Blade Intelligence product portfolio

Commercial data

Item number	1534629

Packing unit	1 pc
Minimum order quantity	1 pc
Sales key	DTHABA
Product key	DTHABA
GTIN	4067923006706
Weight per piece (including packing)	463.45 g
Weight per piece (excluding packing)	463.45 g
Customs tariff number	90318080
Country of origin	DE

Technical data

Notes

Note regarding documentation	For further technical data, refer to the product documentation in the “Downloads” area
Notes on operation	An app that is subject to a fee is required to operate the product. You can purchase and download the app in the PLCnext Store.

Product properties

Product type	Sensor

Dimensions

External dimensions

Width / Height / Depth	145 mm / 45 mm / 8 mm

Material specifications

Material Sensor	Stainless steel (Sensor)
Material Connecting cable	PUR (Connection line)

Cable/line

Cable entry

Connection method	Push-Pull M12 connector

Environmental and real-life conditions

Ambient conditions

Degree of protection	IP67
Ambient temperature (operation)	-40 °C ... 65 °C
Ambient temperature (storage/transport)	-40 °C ... 85 °C
Maximum altitude	≤ 3000 m (Above sea level)

Mounting

Mounting type	screws

Drawings

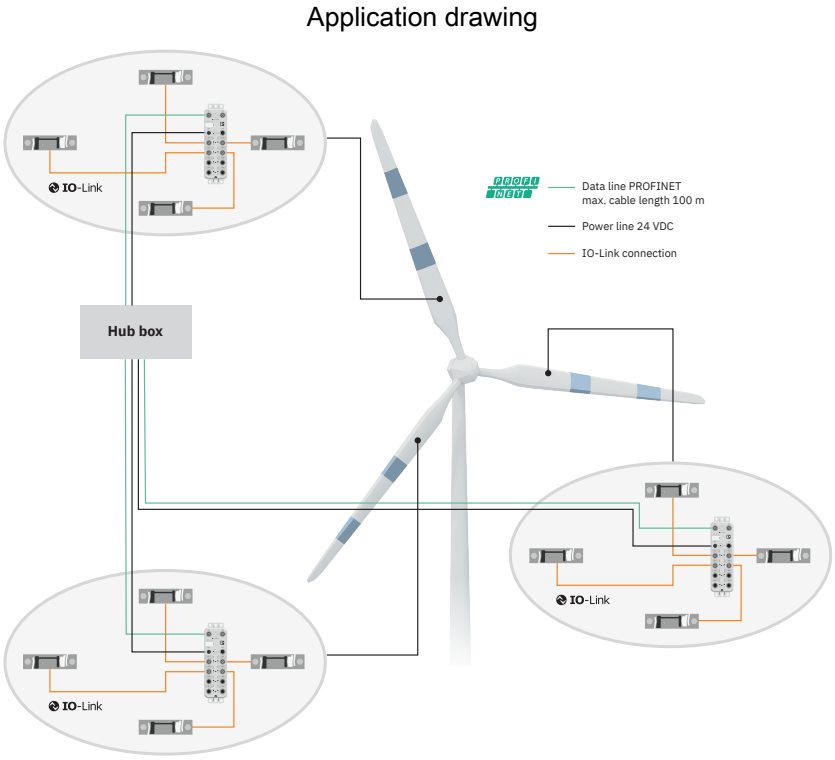

Blade Intelligence: System topology with RM-S-P as an individual solution

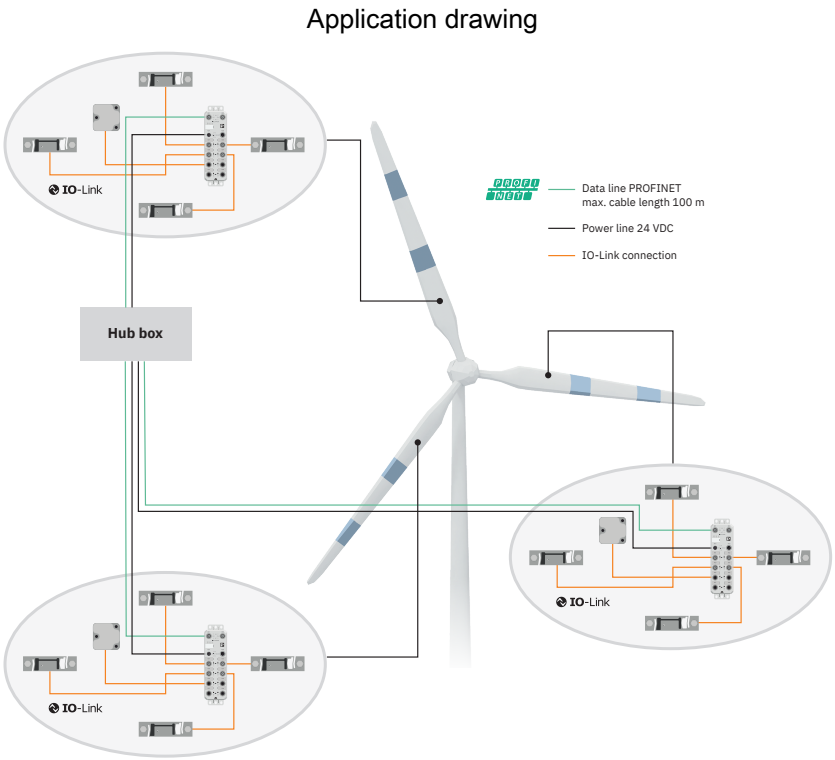

Blade Intelligence: System topology with RM-S-P and ACC-P

Application drawing

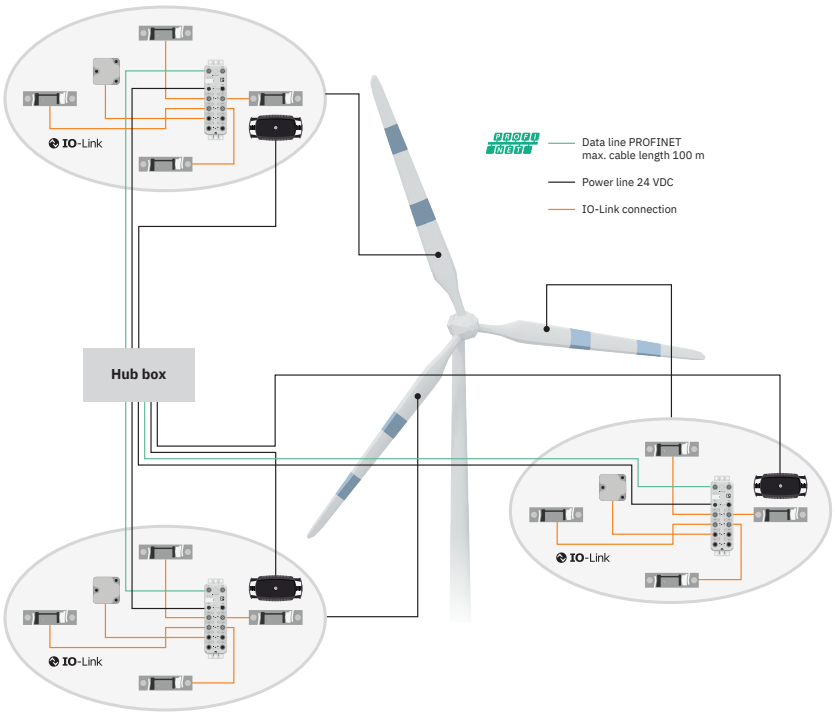

Blade Intelligence: Complete system with all sensors

Classifications

ECLASS

ECLASS-13.0	27143137
ECLASS-15.0	27143137

ETIM

ETIM 10.0	EC000926

UNSPSC

UNSPSC 21.0	43201500

Environmental product compliance

EU RoHS

Fulfills EU RoHS substance requirements	Yes, No exemptions

China RoHS

Environment friendly use period (EFUP)	EFUP-E
	No hazardous substances above the limits

EU REACH SVHC

REACH candidate substance (CAS No.)	No substance above 0.1 wt%

Phoenix Contact 2026 © - all rights reserved
https://www.phoenixcontact.com

PHOENIX CONTACT Ltd
Halesfield 13, Telford
Shropshire, TF7 4PG
01952 681700
info@phoenixcontact.co.uk