CAPAROC E1 12-24DC/12A - Electronic circuit breaker

1524929

https://www.phoenixcontact.com/gb/products/1524929

Please be informed that the data shown in this PDF document is generated from our online catalog. Please find the complete data in the user documentation. Our general terms of use for downloads are valid.

CRA-READY



1-channel electronic circuit breaker module for protecting loads at 12 and 24 V DC against overload and short circuit with current limit. Fixed nominal current of 12 A. For DIN rail installation via the CAPAROC current rails.

Your advantages

- The customizable standard, thanks to individual combinations of the future-proof modular system
- Easy operation for everyone through tool-free assembly, uninterrupted installation, and transparent operating state
- Protection and supply of particularly large loads, thanks to the extended nominal current range up to 20 A

ELEKTROGERÄTE RÜCKNAHME

Commercial data

Item number	1524929
Packing unit	1 pc
Minimum order quantity	1 pc
Sales key	CLA232
Product key	CLA232
GTIN	4063151991388
Weight per piece (including packing)	94.8 g
Weight per piece (excluding packing)	88.6 g

Country of origin	DE

Technical data

Notes

Note on application	As things stand now, we are preparing the product so that, as of December 11, 2027, it will comply with the requirements of the EU Cyber Resilience Act (CRA) based on the information currently available regarding the CRA.

General

Note	LABS release – in accordance with test specification VW PV 3. 10.7:2005-0
	When connecting the conductor, make sure that the CAPAROC modules are not pulled apart due to tensile force. Gaps must not be created between the modules.

Product properties

Product type	Device circuit breakers
Product family	CAPAROC
Type	Plug-in module
Number of positions	1
No. of channels	1
Number of slots	2

Insulation characteristics

Protection class	III
Pollution degree	2

Electrical properties

General

Operating voltage	10 V DC ... 30 V DC
Rated voltage	12 V DC
	24 V DC
Rated current I_N	12 A (per channel)
Rated current (pre-adjusted)	12 A
Rated surge voltage	0.5 kV
Tripping method	E (electronic)
Feedback resistance	max. 35 V DC
Switch-on delay	50 ms (each channel preset by default)
	can be adapted with CAPAROC PM IOL and CAPAROC PM PN power modules
Required backup fuse	Only required if I_{max} of the power supply > the short-circuit switching capacity. Integrated failsafe element.
Short-circuit switching capacity	300 A
Dielectric strength	35 V DC (Load circuit)
Active current limitation	typ. 1.7 x I_N

	Dynamic range of 1.4 ... 1.7 x I_N in case of a weak power supply unit
Fuse	electronic
Efficiency	> 99 %
Closed circuit current I_0	typ. 11 mA (no load at 24 V)
Power dissipation	typ. 280 mW (no load at 24 V)
	< 1.2 W (In nominal operation at 24 V and 12 A)
Measuring tolerance I	± 10 % (typ.)
MTBF (IEC 61709, SN 29500)	10385656 h (at 25 °C with 21 % load)
	4561418 h (at 40°C with 34.25% load)
	484686 h (at 65°C with 100% load)
Voltage drop	< 0.1 V (at 12 A)
Fail-safe element	30 A DC (2 x 15 A parallel per output channel)
Contact switching type	without electrical isolation

Load circuit

Shutdown time	5 s (with overload 1.1…1.5 x I_N)
	typ. 110 ms (max. 250 ms for high starting currents)
	typ. 7 ms (for short circuit > 1,5 x I_N)
Undervoltage switch-off	≤ 8.5 V DC (active)
	≥ 9.2 V DC (inactive)
Overvoltage switch-off	≥ 31.5 V DC (active)
	≤ 30.5 V DC (inactive)
Max. capacitive load	75000 µF (Depending on the current setting, the system voltage, and the available short-circuit current)

Connection data

Fuse-protected output

Connection method	Push-in connection
Stripping length	10 mm
Conductor cross-section flexible	0.2 mm² ... 4 mm²
Conductor cross-section rigid	0.2 mm² ... 4 mm²
Conductor cross-section AWG	24 ... 12
Conductor cross-section, flexible, with ferrule, with plastic sleeve	0.25 mm² ... 4 mm²
Conductor cross-section, flexible, with ferrule, without plastic sleeve	0.25 mm² ... 4 mm²

Signaling

Channel LED off	off (Channel switched off)
Channel LED yellow	lit (Channel switched on, channel load > 80%)
	two flashes (Check the installation, no communication to power module)
Channel LED green	lit (Channel switched on)
Channel LED red	lit (Channel switched off, over- or undervoltage active)
	ON temporarily (Channel switched off, 5 s cool-down phase, overload or short-circuit release)

	flashing (Channel switched off, ready to be switched back on, overload or short-circuit release)
	two flashes (Channel switched off, system total current limit exceeded, weak power supply unit detected)
Channel LED red-yellow	flashing (Channel is overloaded and is switched off)

Dimensions

Dimensional drawing	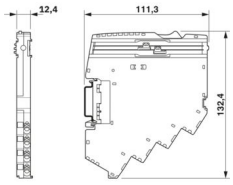
Width	12.4 mm
Height	132.4 mm
Depth	111.3 mm (incl. DIN rail 7.5 mm)

Material specifications

Color	light gray (RAL 7035)
Material	PA 6
	PA 6
	PA 6
	PC
Flammability rating according to UL 94	V-0

Environmental and real-life conditions

Ambient conditions

Degree of protection	IP20
Ambient temperature (operation)	-30 °C ... 65 °C (the temperature range of the power module and the maximum current depending on the ambient temperature must be taken into consideration)
Ambient temperature (storage/transport)	-40 °C ... 70 °C
Altitude	≤ 4000 m (amsl)
Humidity test	96 h, 95 % RH, 40 °C
Shock (operation)	30g (11 ms period, half-sine shock pulse, according to IEC 60068-2-27)
	25g (6 ms duration, half-sine shock pulse in accordance with IEC 60068-2-27, continuous shock)
Vibration (operation)	5g (10 Hz ... 150 Hz / 10 cycles / axis / X, Y, Z)

Standards and regulations

Standards/specifications	EN 61000-6-2
Note	EMC – Immunity for industrial areas
Standards/specifications	EN 61000-6-3
Note	EMC – Emission for residential, business and commercial properties and small operations

Standards/specifications	EN 60068-2-78
Note	Environmental influences – Moisture and heat, constant
Standards/specifications	EN 50178
Note	Equipping power installations with electronic equipment
Standards/specifications	EN 60068-2-6
Note	Environmental influences – Vibrations (sinusoidal)
Standards/specifications	EN 60068-2-27
Note	Environmental influences – Shocks

Mounting

Mounting type	pluggable onto CAPAROC CR… current rail

Drawings

Dimensional drawing

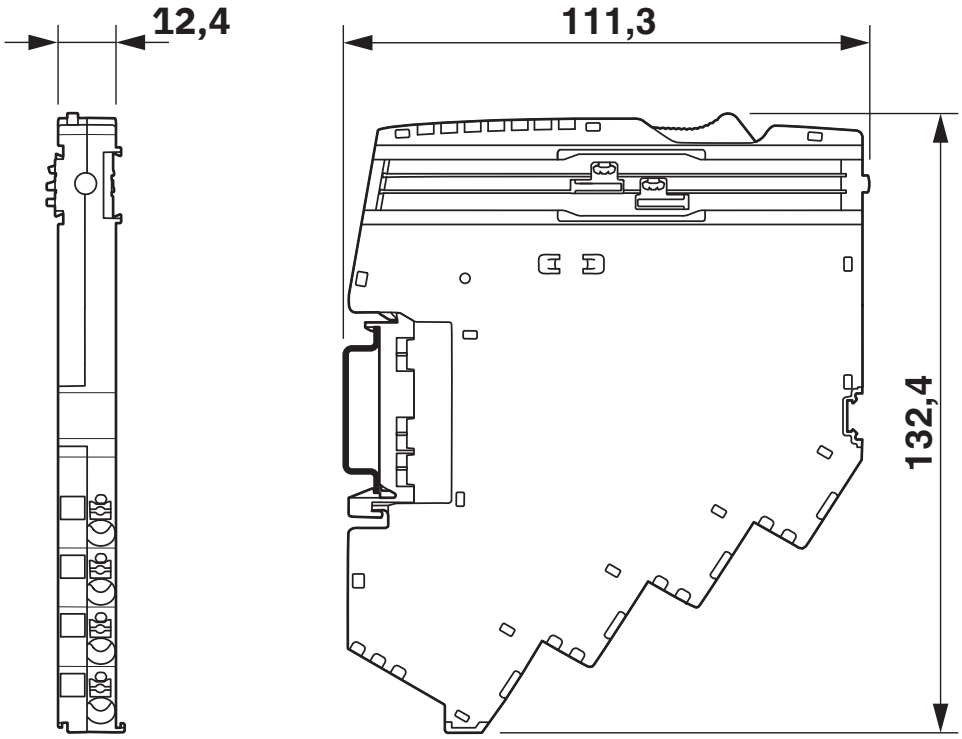

CAPAROC E1 12-24DC/12A - Electronic circuit breaker

1524929

https://www.phoenixcontact.com/gb/products/1524929

Product drawing

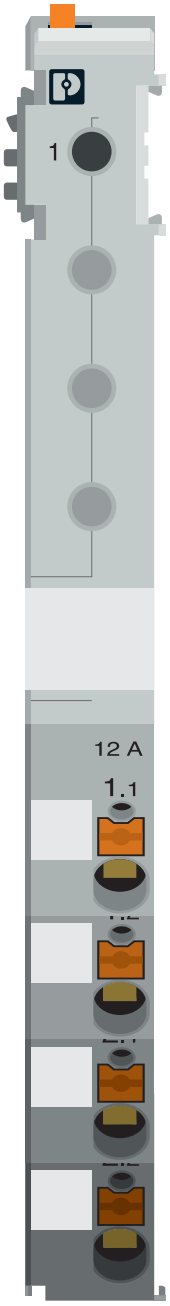

CAPAROC E1 12-24DC/12A - Electronic circuit breaker

1524929

https://www.phoenixcontact.com/gb/products/1524929

Application drawing

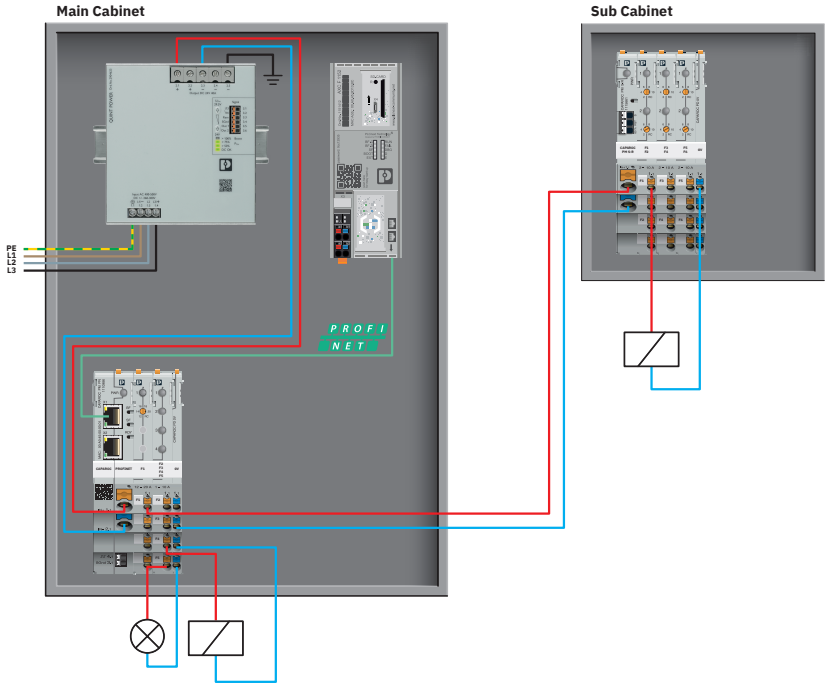

Diagram

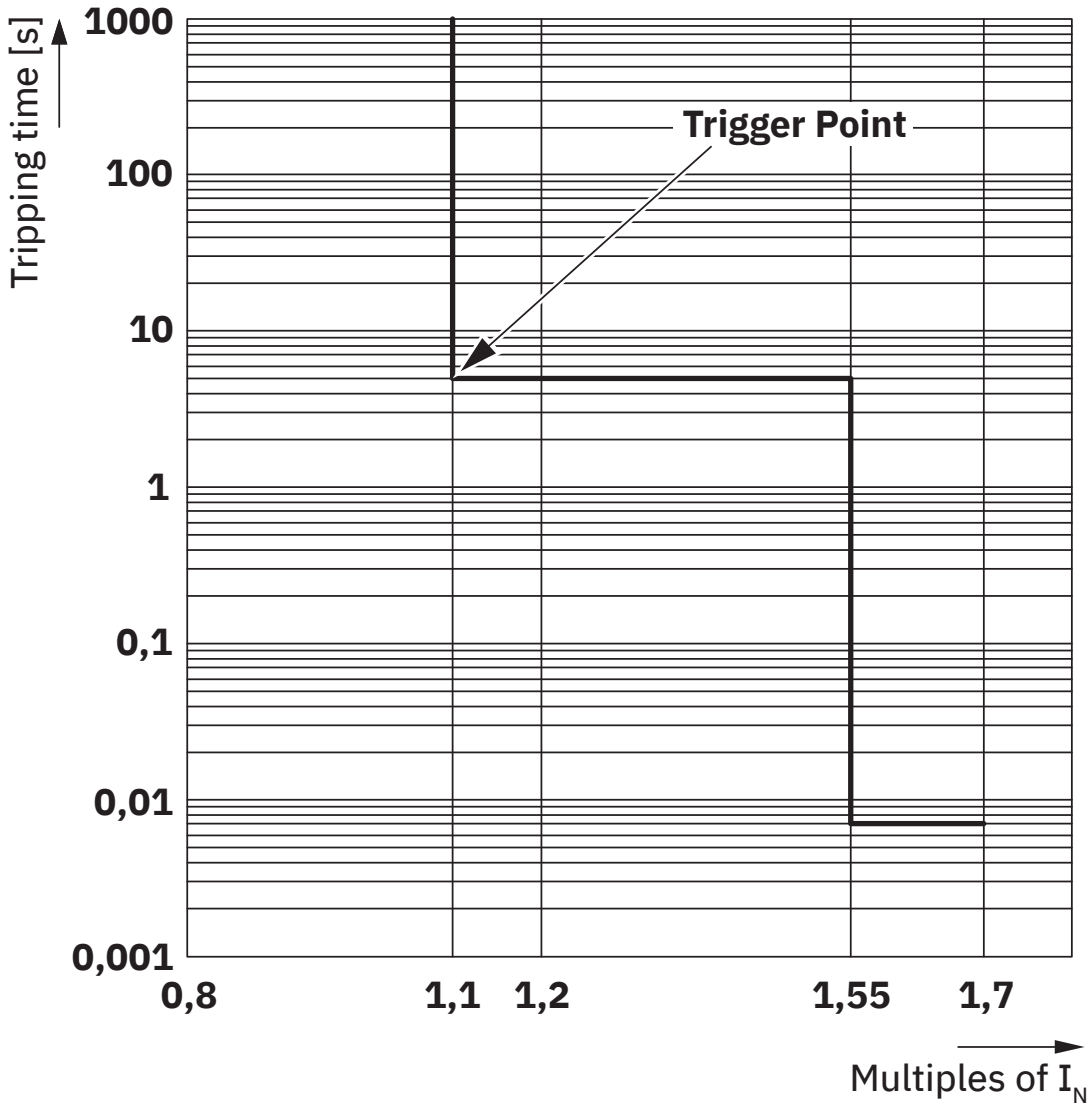

Trigger characteristic

Diagram

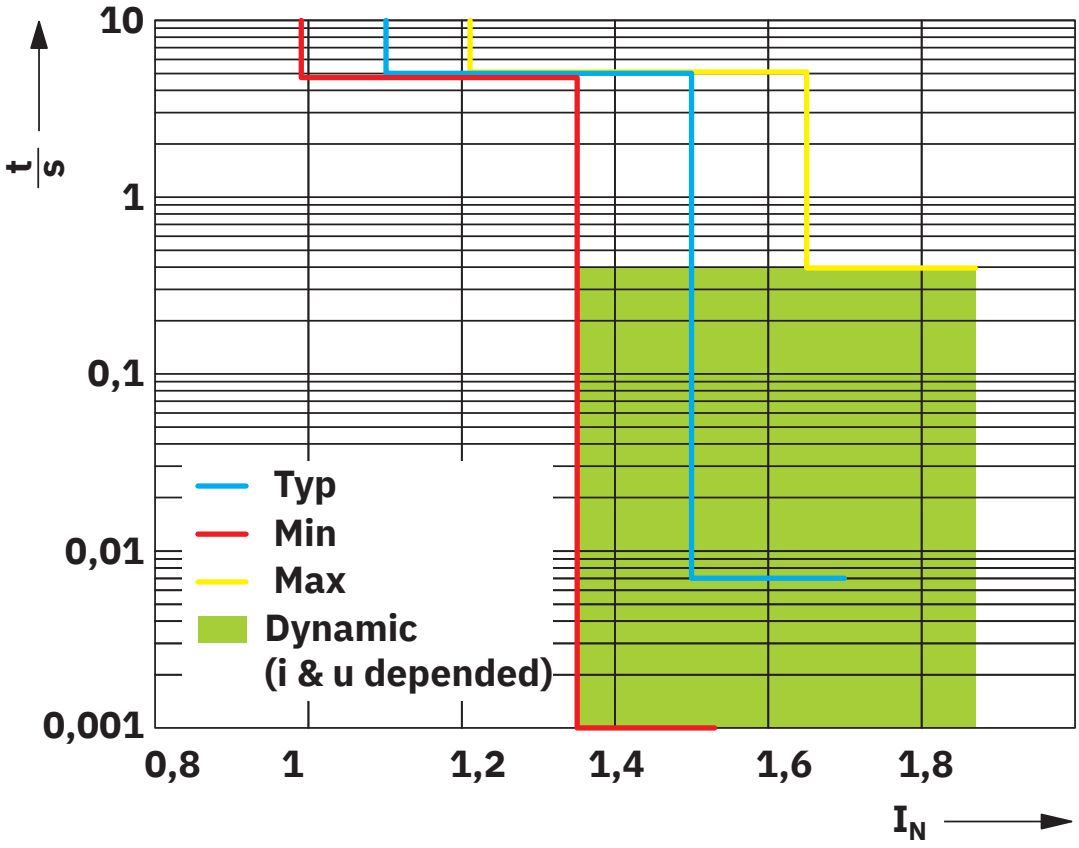

Block diagram

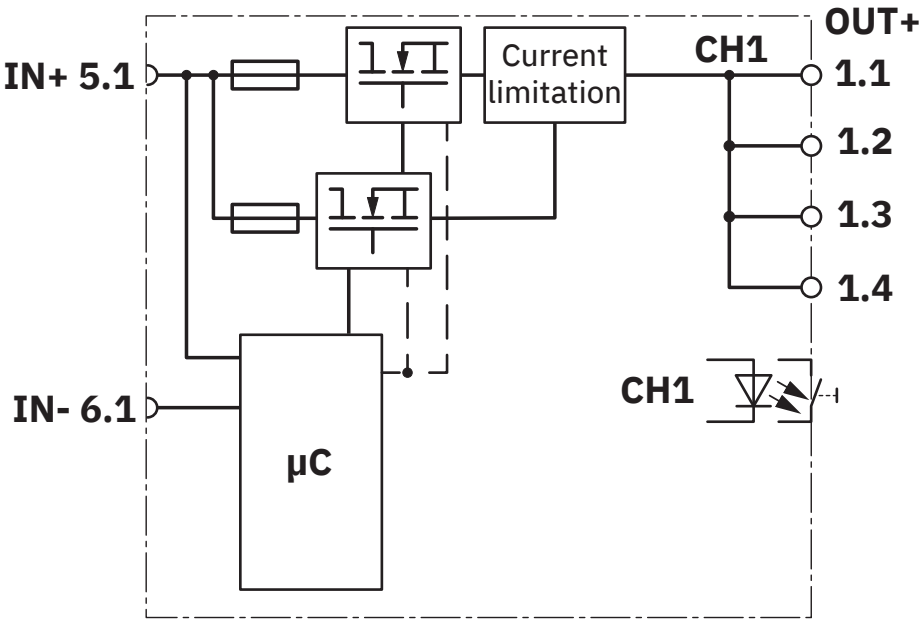

Classifications

ECLASS

ECLASS-13.0	27140401
ECLASS-15.0	27140401

ETIM

ETIM 10.0	EC003538

UNSPSC

UNSPSC 21.0	39121400

Environmental product compliance

EU RoHS

Fulfills EU RoHS substance requirements	Yes
Exemption	7(a), 7(c)-I

China RoHS

Environment friendly use period (EFUP)	EFUP-50
	An article-related China RoHS declaration table can be found in the download area for the respective article under "Manufacturer declaration". For all articles with EFUP-E, no China RoHS declaration table issued and required.

EU REACH SVHC

REACH candidate substance (CAS No.)	Lead(CAS: 7439-92-1)

Phoenix Contact 2026 © - all rights reserved
https://www.phoenixcontact.com

PHOENIX CONTACT Ltd
Halesfield 13, Telford
Shropshire, TF7 4PG
01952 681700
info@phoenixcontact.co.uk