TCP 32DC/20A M - Thermal device circuit breaker

1499969

https://www.phoenixcontact.com/gb/products/1499969

Please be informed that the data shown in this PDF document is generated from our online catalog. Please find the complete data in the user documentation. Our general terms of use for downloads are valid.



1-channel thermal device circuit breaker for protecting loads up to 32 V DC in the event of an overload. Fuse type: slow-blow. Can be plugged onto fuse terminal blocks and interfaces for flat plug-in fuse of type C according to standard ISO 8820-3. With fixed nominal current: 20 A

Your advantages

- Fast, replacement part-free recommissioning after an event with the reconnection options
- Easy to retrofit in existing systems with vehicle flat-type fuses with identical pin connector pattern
- Easy identification of the nominal current value via color marking

ELEKTROGERÄTE RÜCKNAHME

Commercial data

Item number	1499969
Packing unit	100 pc
Minimum order quantity	100 pc
Sales key	CLA112
Product key	CLA112
GTIN	4063151956134
Weight per piece (including packing)	4.7 g
Weight per piece (excluding packing)	4.687 g
Customs tariff number	85362010
Country of origin	CN

Technical data

Product properties

Product type	Thermal device circuit breakers
Type	Male
Number of positions	1
No. of channels	1

Insulation characteristics

Protection class	III

Electrical properties

Fuse	thermal

General

Rated voltage	max. 32 V DC
Rated current I_N	20 A
Required backup fuse	Only required if I_{max} of the power supply > the short-circuit switching capacity.
Rated short-circuit switching capacity I_{cn}	200 A (≥3 shutdowns)
Short-circuit switching capacity	150 A (≥3 shutdowns)
	2000 A (≥ 1 switch-off)
Fuse	thermal
Voltage drop	< 150 mV
Contact switching type	Type C in accordance with ISO 8820-3

Connection data

Connection method	pluggable

Dimensions

Dimensional drawing	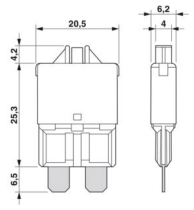
Width	6.2 mm
Height	19.7 mm
Depth	29.5 mm

Material specifications

Color	colza yellow (RAL 1021)
Material	CuSn
	(Plug-in contact)

Flammability rating according to UL 94	V-0
Insulating material	PA 6
Housing material	PA 6

Mechanical properties

Mechanical data

Open side panel	No

Environmental and real-life conditions

Ambient conditions

Degree of protection	IP30 (Actuation area)
Ambient temperature (operation)	-40 °C ... 85 °C
Ambient temperature (storage/transport)	-40 °C ... 125 °C

Mounting

Mounting type	on base element

Drawings

Dimensional drawing

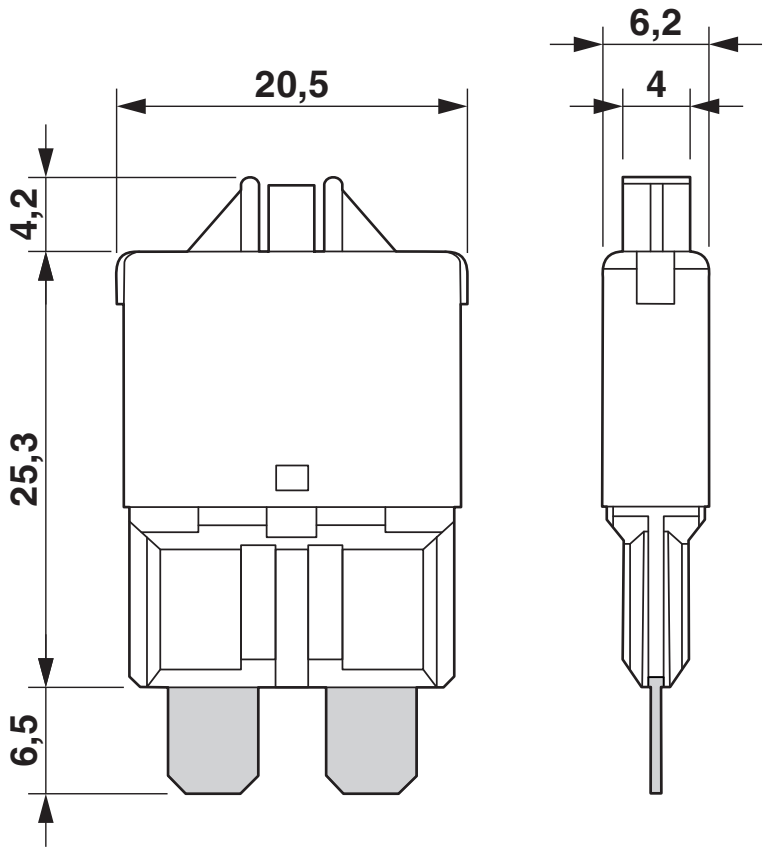

Diagram

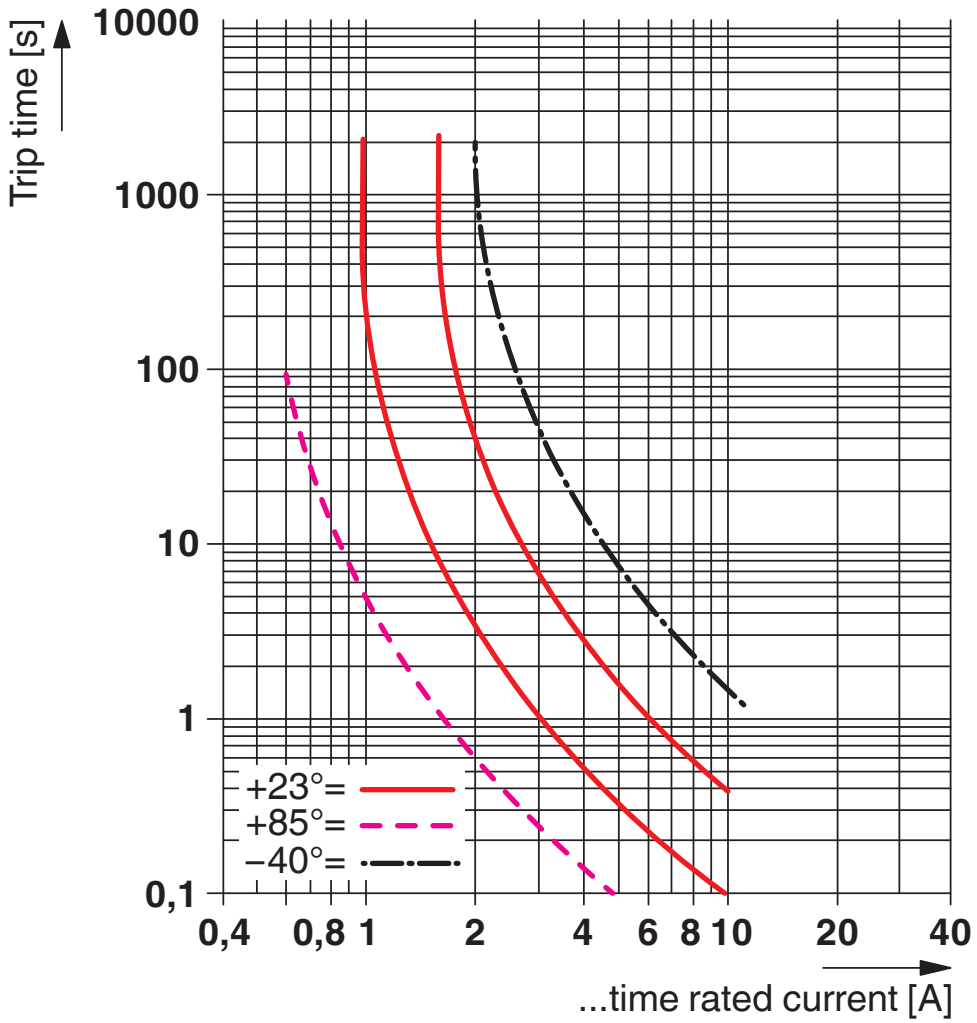

Trigger characteristic

Classifications

ECLASS

ECLASS-13.0	27140401
ECLASS-15.0	27140401

ETIM

ETIM 10.0	EC003538

UNSPSC

UNSPSC 21.0	39121400

Environmental product compliance

EU RoHS

Fulfills EU RoHS substance requirements	Yes, No exemptions

China RoHS

Environment friendly use period (EFUP)	EFUP-E
	No hazardous substances above the limits

EU REACH SVHC

REACH candidate substance (CAS No.)	No substance above 0.1 wt%

EF3.1 Climate Change

CO2e kg	0.591 kg CO2e

Phoenix Contact 2026 © - all rights reserved
https://www.phoenixcontact.com

PHOENIX CONTACT Ltd
Halesfield 13, Telford
Shropshire, TF7 4PG
01952 681700
info@phoenixcontact.co.uk