AXL E IOL DI16 M12 6M - Digital module

1480998

https://www.phoenixcontact.com/gb/products/1480998

Please be informed that the data shown in this PDF document is generated from our online catalog. Please find the complete data in the user documentation. Our general terms of use for downloads are valid.

CRA-READY



Axioline E, Digital input device, IO-Link ports Class A: 1, connection method: M12 connector, A-coded, connection technology: 3-conductor, Digital inputs: 16, 24 V DC, connection technology: 4-conductor, IO-Link, degree of protection: IP65/IP67/IP69; The product is being prepared for compliance with the Cyber Resilience Act (CRA).

Product description

You can connect this Axioline E device to an IO-Link master via an IO-Link A port. You can use this device to acquire digital signals via IO-Link. Use within different networks is possible via the IO-Link master.

Your advantages

- Connection to an IO-Link master with M12 connector (A-coded, 4-pos.)
- Type A port
- IO-Link specification V1.1.3
- Connection of up to 16 inputs with M12 connectors (A-coded, 5-pos.)
- Diagnostic and status indicators
- Single-channel diagnostics
- Short-circuit and overload protection of the sensor supply
- Device rating plate stored
- IP65/IP67/IP69 degree of protection

Commercial data

Item number	1480998
Packing unit	1 pc
Minimum order quantity	1 pc
Sales key	DRI7NF
Product key	DRI7NF
GTIN	4063151900502
Weight per piece (including packing)	528.2 g
Weight per piece (excluding packing)	513 g
Customs tariff number	85176200

Country of origin	DE

Technical data

Dimensions

Dimensional drawing	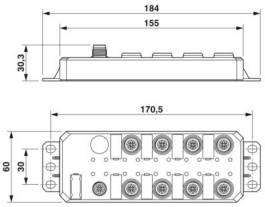
Width	60 mm
Height	184 mm
Depth	30.3 mm

Notes

Note on application	Only for industrial use
Note on application	As things stand now, we are preparing the product so that, as of December 11, 2027, it will comply with the requirements of the EU Cyber Resilience Act (CRA) based on the information currently available regarding the CRA.

Mounting

Mounting type	Screw mounting

Material specifications

Color (Housing)	zinc color
Housing material	Die-cast zinc

Input data

Digital:

Input name	Digital inputs
Description of the input	IEC 61131-2 types 1 and 3
Number of inputs	16
Cable length	max. 30 m (to the sensor)
Connection method	M12 connector, A-coded
Note on the connection method	Push-pull fast connection according to IEC 61076-2-010 or screw connection according to IEC 61076-2-101
Connection technology	4-conductor
Input voltage range "0" signal	-3 V ... 5 V DC
Input voltage range "1" signal	11 V DC ... 30 V DC
Nominal input voltage U_{IN}	24 V DC
Nominal input current at U_{IN}	typ. 2.5 mA
Input filter time	1 ms
Protective circuit	Reverse polarity protection; yes
	Short-circuit protection; yes

	Overload protection; yes

IO-Link

Number of ports	1
Connection method	M12 connector, A-coded
Note on the connection method	Push-pull fast connection according to IEC 61076-2-010 or screw connection according to IEC 61076-2-101
Connection technology	3-conductor
Port type	Class A
Specification	V1.1.3
Reverse polarity protection	yes
Transmission speed	230.4 kbps (COM3)
Cycle Time	600 µs
Amount of process data	3 Byte (Input data)
	0 Byte (Output data)

Product properties

Product type	I/O component
Product family	Axioline E
Type	Stand-alone
Special properties	The product is being prepared for compliance with the Cyber Resilience Act (CRA)
	IO-Link

Insulation characteristics

Overvoltage category	II (IEC 60664-1, EN 60664-1)
Pollution degree	2 (IEC 60664-1, EN 60664-1)

Electrical properties

Supply: IO-Link

Designation	IO-Link port supply (L+)
Nominal voltage for I/O supply	24 V DC (Provided via the IO-Link interface of the IO-Link master.)
Supply voltage range	18 V DC ... 30 V DC (including all tolerances, including ripple)
Nominal current per device	typ. 30 mA
Current consumption	max. 800 mA (device dependent; observe the current of the IO-Link master that is made available via L+)
Protective circuit	Reverse polarity protection; yes

Supply: Sensors

Designation	Supply of the sensors (from L+)
Current consumption	max. 800 mA (per port)
	max. 800 mA (device dependent; observe the current of the IO-Link master that is made available via L+)

Electrical isolation/isolation of the voltage ranges

Test voltage: 24 V supply L+ (IO-Link)/functional ground	500 V AC, 50 Hz, 1 min

Connection data

Connection method	M12 connector
Tightening torque	0.4 Nm

Environmental and real-life conditions

Ambient conditions

Ambient temperature (operation)	-25 °C ... 70 °C
	-40 °C ... 70 °C (Extended, see section “Use under extreme ambient conditions” in the data sheet)
Degree of protection	IP65/IP67/IP69
	IK08 (Impact resistance level)
Air pressure (operation)	70 kPa ... 108 kPa (up to 3000 m above sea level)
Air pressure (storage/transport)	66 kPa ... 108 kPa (up to 3000 m above sea level)
Ambient temperature (storage/transport)	-25 °C ... 85 °C
Permissible humidity (storage/transport)	75 % (non-condensing)

Mechanical test

Vibration resistance in accordance with EN 60068-2-6/IEC 60068-2-6	5g
Shock in accordance with EN 60068-2-27/IEC 60068-2-27	30g
Continuous shock in accordance with EN 60068-2-27/IEC 60068-2-27	10g

Test (noxious gas)

Test standard	IEC 60068-2-60:2015 Method 4
Temperature	25 °C ±1 K
Humidity (relative)	75 % ±3 %
Test duration	14 Days
Volume concentration H_2S (Hydrogen sulfide)	10 ppb ±5 ppb
Volume concentration NO_2 (Nitrogen dioxide)	200 ppb ±20 ppb
Volume concentration Cl_2 (Chlorine)	10 ppb ±5 ppb
Volume concentration SO_2 (Sulfur dioxide)	200 ppb ±20 ppb

Test (Salt spray)

Test standard	DIN EN 60068-2-52
Number of cycles	4
Test steps per cycle	2
Test duration (Total)	168 h
Test step (Salt mist)	2 h with 5 % ±0.5 % NaCl, pH value 6.5...7.2 for 35 °C ±2 K
Test step (Humidity)	166 h with 93 % ±3 % Humidity for 40 °C ±2 K

Standards and regulations

Protection class	III (IEC 61140, EN 61140, VDE 0140-1)

Drawings

Dimensional drawing

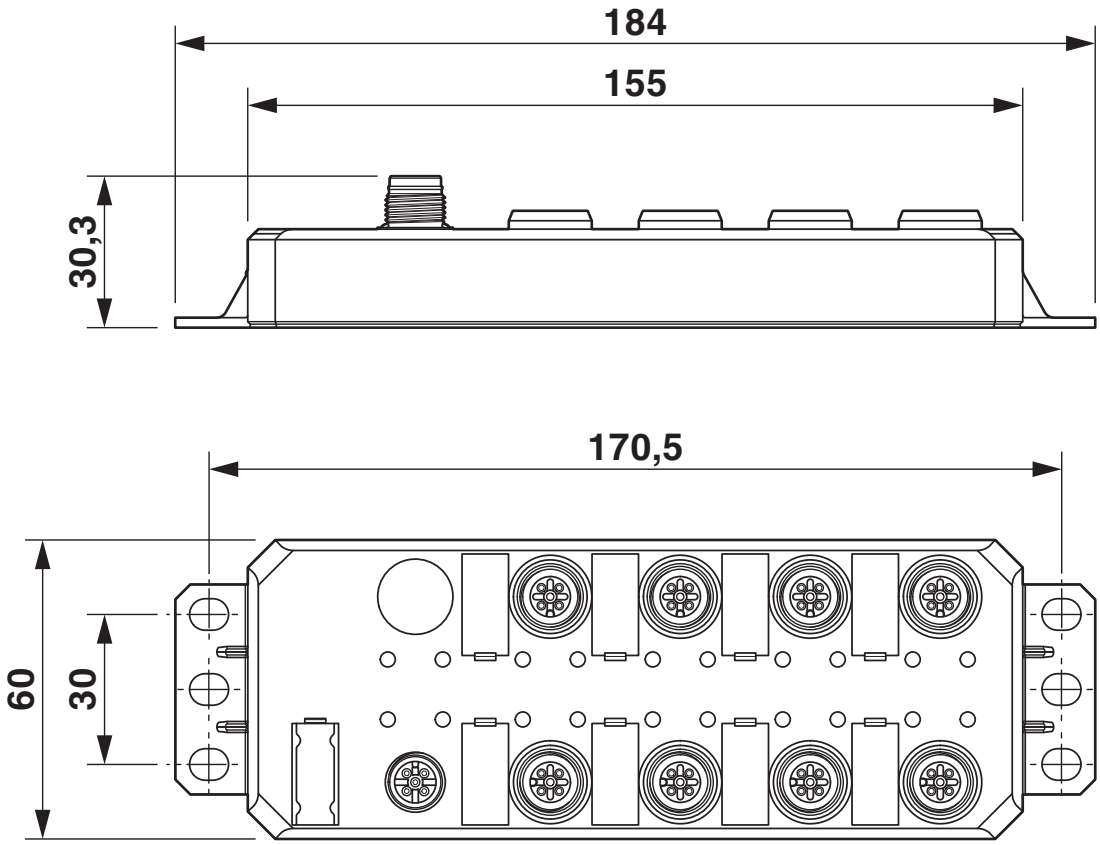

Dimensions (in mm)

Connection diagram

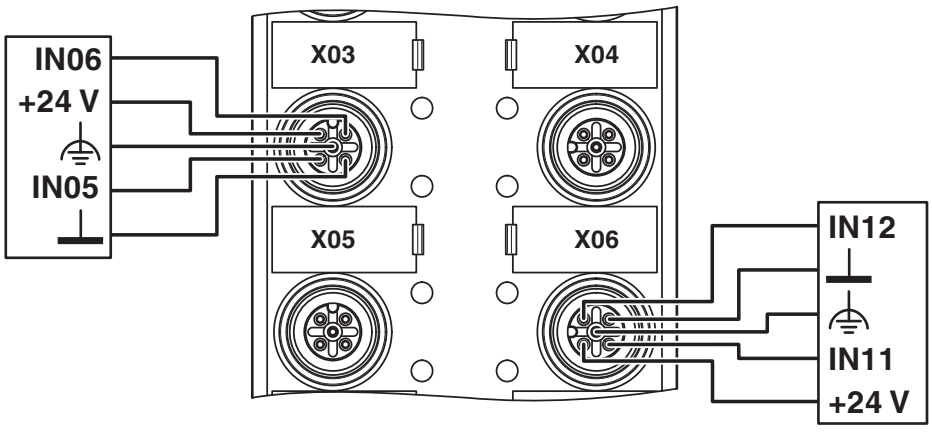

Connection example

Block diagram

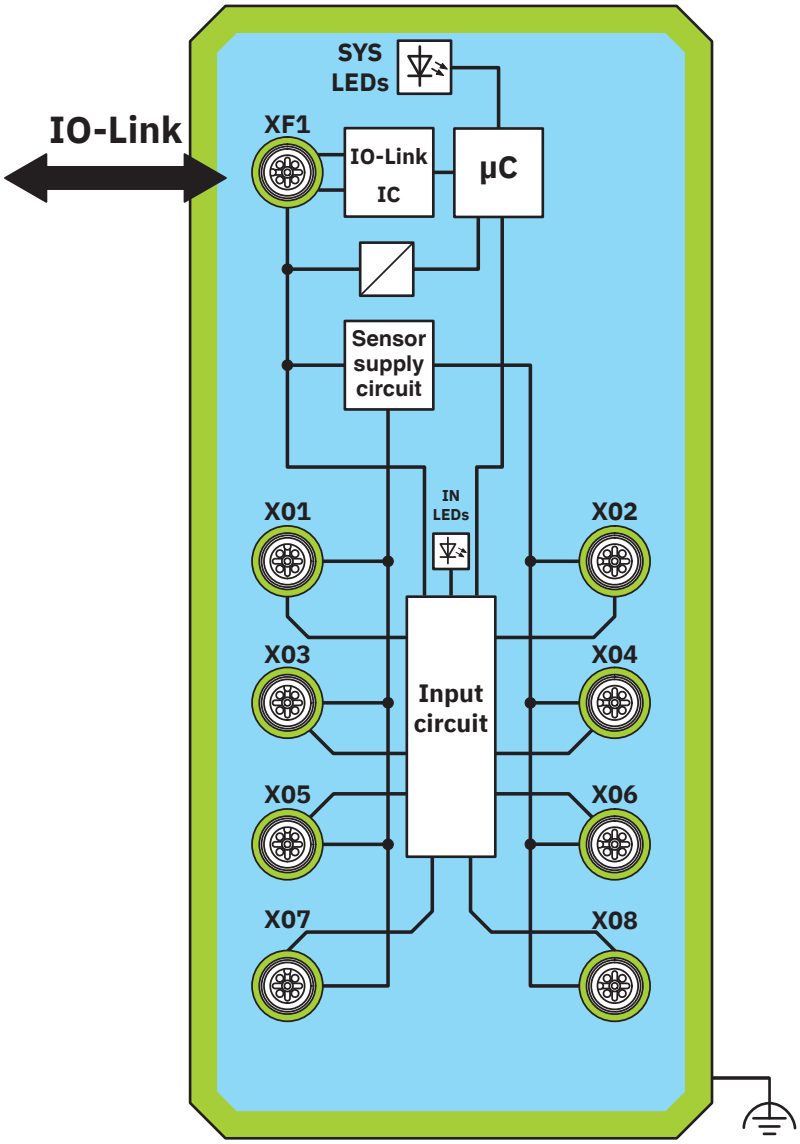

Basic circuit diagram

Approvals

To download certificates, visit the product detail page: https://www.phoenixcontact.com/gb/products/1480998

UL Listed
Approval ID: E238705

cUL Listed
Approval ID: E238705

cULus Listed
Approval ID: E238705

cUL Listed
Approval ID: E238705

UL Listed
Approval ID: E238705

cULus Listed
Approval ID: E238705

Classifications

ECLASS

ECLASS-13.0	27242604
ECLASS-15.0	27242604

ETIM

ETIM 10.0	EC001599

Environmental product compliance

EU RoHS

Fulfills EU RoHS substance requirements	Yes
Exemption	7(a), 7(c)-I

China RoHS

Environment friendly use period (EFUP)	EFUP-50
	An article-related China RoHS declaration table can be found in the download area for the respective article under "Manufacturer declaration". For all articles with EFUP-E, no China RoHS declaration table issued and required.

EU REACH SVHC

REACH candidate substance (CAS No.)	Lead(CAS: 7439-92-1)

Phoenix Contact 2026 © - all rights reserved
https://www.phoenixcontact.com

PHOENIX CONTACT Ltd
Halesfield 13, Telford
Shropshire, TF7 4PG
01952 681700
info@phoenixcontact.co.uk