STEP3-PS/1AC/KNX/640/LPT - Bus power supply

1477019

https://www.phoenixcontact.com/gb/products/1477019

Please be informed that the data shown in this PDF document is generated from our online catalog. Please find the complete data in the user documentation. Our general terms of use for downloads are valid.



Primary-switched bus power supply STEP POWER, Lever Push-in connection, DIN rail or direct mounting, input: 1-phase, output: 30 V DC / 640 mA

Product description

The KNX bus power supply of the STEP POWER family is tailored ideally to modern building automation. As the first bus power supply, it has an active KNX filter circuit. This adapts dynamically to the connected KNX devices, increasing the efficiency of the bus system. The multifunctional color display shows all relevant KNX status information at a glance, such as the current bus load or historical values as a diagnostic tool in the menu. Thanks to the wide input voltage range of 85 V AC to 264 V AC and 90 V DC to 275 V DC, the KNX bus power supply can be used worldwide. The integrated Push-in lever connections complete the handling of the STEP POWER bus power supply.

Your advantages

- Easy analysis, thanks to integrated color display - all relevant KNX status information at a glance
- History can be called up as diagnostic values in the menu
- Active KNX choke for reliable bus communication up to maximum power
- Space-saving, thanks to the compact design
- Worldwide use, thanks to AC and DC wide range input

ELEKTROGERÄTE RÜCKNAHME

Commercial data

Item number	1477019
Packing unit	1 pc
Minimum order quantity	1 pc
Sales key	CMPH13
Product key	CMPH13
GTIN	4063151891213

Weight per piece (including packing)	248 g
Weight per piece (excluding packing)	207 g
Customs tariff number	85044095
Country of origin	VN

Technical data

Input data

AC operation

Supply system configuration	TN, TT, IT (PE)
Input voltage range	100 V AC ... 240 V AC -15 % ... +10 %
Typical national grid voltage	120 V AC
	230 V AC
Voltage type of supply voltage	AC
Inrush current	typ. 35 A (25 °C)
Inrush current integral (I^2t)	typ. 1.3 A^2s
Frequency range (f_N)	50 Hz ... 60 Hz ±10 %
Mains buffering time	typ. 100 ms (100 V AC)
	typ. 100 ms (230 V AC)
Current consumption	0.41 A (100 V AC)
	0.22 A (240 V AC)
Protective circuit	Transient surge protection; Varistor
Switch-on time	typ. 2 s
Device mains fuse	4 A internal (device protection), slow-blow
Recommended breaker for input protection	6 A ... 20 A (Characteristics B, C, D, K)
Discharge current to PE	< 3.5 mA

DC operation

Input voltage range	100 V DC ... 250 V DC -10 % ... +10 %
Voltage type of supply voltage	DC
Current consumption	0.22 A (100 V DC)
	0.09 A (250 V DC)

Output data

Efficiency	> 86 % (120 V AC)
	> 86 % (230 V AC)
Nominal output voltage	30 V DC
Nominal output current (I_N)	640 mA (I_{BUS} + I_{AUX})
Short-circuit-proof	yes
Derating	> 45 °C ... 70 °C (2 % / K)
Crest factor	typ. 3.4
	typ. 4.08
Output power (P_N)	19.2 W
Connection in parallel	yes, 2
Connection in series	no
Feedback voltage resistance	35 V DC
Protection against overvoltage at the output (OVP)	35 V DC
Residual ripple	typ. 100 mV_{PP}

Control deviation	< 0.5 % (Static load change 10 % ... 90 %)
	< 3 % (Dynamic load change 10 % ... 90 %, (10 Hz))
	< 0.1 % (change in input voltage ±10 %)
Rise time	typ. 100 ms (U_{Out} = 10 % ... 90 %)
Minimum no-load power dissipation	< 0.25 W (120 V AC)
Maximum no-load power dissipation	< 0.31 W (230 V AC)
Minimum nominal load power dissipation	3.1 W (120 V AC)
Power loss nominal load max.	3.3 W (230 V AC)
Integrated fuse protection	no
Nominal output voltage	30 V DC
Nominal output current (I_N)	640 mA (I_{BUS} + I_{AUX})
Short-circuit-proof	yes
Output power (P_N)	19.2 W
Connection in parallel	yes, for increased efficiency and redundancy
Connection in series	no
Feedback voltage resistance	35 V DC
Protection against overvoltage at the output (OVP)	35 V DC
Residual ripple	typ. 100 mV_{PP}
Rise time	typ. 100 ms

Connection data

Input

Position	1.x

Connection technology

Position marking	1.1 (N), 1.3 (L)

Conductor connection

Connection method	Lever Push-in connection
rigid (Terminal block)	0.2 mm² ... 4 mm²
rigid (recommended)	1.5 mm² (recommended)
flexible (Klemme)	0.2 mm² ... 4 mm²
flexible (empfohlen)	1.5 mm² (recommended)
flexible with ferrule without plastic sleeve (Terminal block)	0.2 mm² ... 2.5 mm²
flexible with ferrule without plastic sleeve (recommended)	1.5 mm² (recommended)
flexible with ferrule with plastic sleeve (Terminal block)	0.2 mm² ... 2.5 mm²
flexible with ferrule with plastic sleeve (recommended)	1.5 mm² (recommended)
rigid (AWG) (Terminal block)	24 ... 12 (Cu)
rigid (AWG) (recommended)	16 (recommended)
Stripping length (starr/flexibel)	10 mm (solid)
Stripping length (Aderendhülse)	10 mm (Ferrule)

Output

Position	2.x

Connection technology

Position marking	2.1 (BUS +), 2.2 (BUS -), 2.3 (AUX +), 2.4 (AUX -)

Conductor connection

Connection method	Push-in connection
rigid (Terminal block)	0.34 mm² ... 0.5 mm²
rigid (recommended)	0.5 mm² (recommended)
rigid (AWG) (Terminal block)	22 ... 20 (Cu)
rigid (AWG) (recommended)	20 (recommended)
Stripping length	5 mm ... 6 mm (solid)

Signaling

LED signaling

Types of signaling	LED DC OK AUX
Function	Visual operating state display
Color	green
LED off	< 24 V DC (Off)
LED on (green), DC OK	> 24 V DC (lit)

LED signaling

Types of signaling	Display DC OK BUS
Function	Visual operating state display
Color	red, yellow, green (multicolor LED)
LED on (green), DC OK	28 V DC ≥ U_{OUT} ≤ ⎍⎍⎍ V DC (LED lights up green)

LED signaling

Types of signaling	Display bar graph
Function	Visual operating state display
Color	red, yellow, green

LED signaling

Types of signaling	Display temperature LED
Function	Visual operating state display
Color	red, green

Electrical properties

Number of phases	1
Insulation voltage input/output	4 kV AC (type test)
	3.75 kV AC (routine test)

Product properties

Product type	Bus power supply
Product family	STEP POWER
MTBF (IEC 61709, SN 29500)	> 1718000 h (25 °C)
	> 1052000 h (40 °C)

	> 750000 h (50 °C)

Insulation characteristics

Protection class	I
Overvoltage category (EN 61010-2-201)	II (≤ 5000 m)
Overvoltage category (EN 62368-1)	II (≤ 5000 m)
Overvoltage category (EN 62477-1)	III (≤ 2000 m)
Overvoltage category (IEC 60664-1)	III (≤ 2000 m)
Overvoltage category (IEC 63044-3)	III (≤ 2000 m)
Overvoltage category (EN 61558-2-16)	II (≤ ⌐⌐⌐ m)
Degree of pollution	2

Life expectancy (electrolytic capacitors)

Temperature	40 °C
Time	87600 h
Additional text	120 V AC

Life expectancy (electrolytic capacitors)

Temperature	40 °C
Time	87600 h
Additional text	230 V AC

Dimensions

Item dimensions

Width	54 mm
Height	90 mm
Depth	61 mm
Depth (Device depth (DIN rail mounting))	55 mm (Device depth (DIN rail mounting))
Dimensional drawing	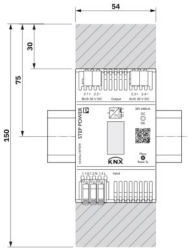
Horizontal pitch	3 HP (DIN 43880)

Installation dimensions

Installation distance right/left	0 mm / 0 mm
Installation distance top/bottom	30 mm / 30 mm

Mounting

Mounting type	DIN rail or direct mounting
Assembly note	alignable: 0 mm horizontally, 30 mm vertically

Mounting position	horizontal DIN rail NS 35, EN 60715
With protective coating	no

Material specifications

Flammability rating according to UL 94	V0 (Housing, terminal blocks, base latches)
Housing material	Plastic
Housing material	PC
Foot latch material	Polyamid

Environmental and real-life conditions

Ambient conditions

Degree of protection	IP20
Ambient temperature (operation)	-10 °C ... 70 °C (Derating > 45 °C: 2 %/K)
Ambient temperature (storage/transport)	-30 °C ... 80 °C
Ambient temperature (start-up type tested)	-25 °C
Maximum altitude	≤ 5000 m
Maximum altitude (Output power derating)	> 2000 m (Derating P_{OUT}: 10 %/1000 m)
Max. permissible relative humidity (operation)	≤ 95 % (non-condensing)
Shock (operation)	18 ms, 30g, per spatial direction (IEC 60068-2-27)
Vibration (operation)	< 15 Hz, amplitude ±2.5 mm (IEC 60068-2-6)
	15 Hz ... 150 Hz, 2.3g, 90 min.

Standards and regulations

Electrical safety

Standard designation	Electrical safety
Standards/specifications	IEC 61010-1 (SELV)

Protective extra-low voltage

Standard designation	Protective extra-low voltage
Standards/specifications	IEC 61010-1 (SELV)
	IEC 61010-2-201 (PELV)

Safe isolation

Standard designation	Safe isolation
Standards/specifications	IEC 61558-2-16

Electrical safety

Standard designation	Home and Building Electronic Systems (HBES) and Building Automation and Control Systems (BACS): General Requirements
Standards/specifications	IEC 63044-3

Safety requirements for electrical equipment for measurement, control, and laboratory use

Standard designation	Safety requirements for electrical equipment for measurement, control, and laboratory use
Standards/specifications	IEC 61010-1
Standard designation	Information technology - architecture for home electronic

	systems (KNX standard)
Standards/specifications	IEC 14543-3

Approvals

UL

Identification	UL/C-UL Listed UL 61010-1

UL

Identification	UL/C-UL Listed UL 61010-2-201

EMC data

Electromagnetic compatibility	Conformance with EMC Directive 2014/30/EU
Low Voltage Directive	Conformance with Low Voltage Directive 2014/35/EC
Interference emission	Interference emission in accordance with EN 61000-6-3 (residential and commercial) and EN 61000-6-4 (industrial)
Noise immunity	EN 61000-6-2:2005

Conducted noise emission

Standards/regulations	EN 55016
	EN 61000-6-3 (Class B)

Noise emission

Standards/regulations	EN 55016
	EN 61000-6-3 (Class B)

Harmonic currents

Standards/regulations	EN 61000-3-2
	EN 61000-3-2 (Class A)

Flicker

Standards/regulations	EN 61000-3-3
Frequency range	0 kHz ... 2 kHz

Electrostatic discharge

Standards/regulations	EN 61000-4-2

Electrostatic discharge

Contact discharge	6 kV (Test Level 3)
Discharge in air	8 kV (Test Level 3)
Comments	Criterion A

Electromagnetic HF field

Standards/regulations	EN 61000-4-3

Electromagnetic HF field

Frequency range	80 MHz ... 1 GHz
Test field strength	10 V/m (Test Level 3)
Frequency range	1 GHz ... 6 GHz

Test field strength	10 V/m (Test Level 3)
Comments	Criterion A

Fast transients (burst)

Standards/regulations	EN 61000-4-4

Fast transients (burst)

Input	asymmetrical 2 kV (Test Level 3)
Output	asymmetrical 1 kV (Test Level 2)
Comments	Criterion A

Surge voltage load (surge)

Standards/regulations	EN 61000-4-5

Surge voltage load (surge)

Input	symmetrical 1 kV (Test Level 3)
	asymmetrical 2 kV (Test Level 3)
Output	asymmetrical 2 kV (Test Level 3)
Comments	Criterion A

Conducted interference

Standards/regulations	EN 61000-4-6

Conducted interference

Input/Output	asymmetrical
Frequency range	0.15 MHz ... 80 MHz
Comments	Criterion A
Voltage	10 V (Test Level 3)

Voltage dips

Standards/regulations	EN 61000-4-11
Voltage	230 V AC
Frequency	50 Hz
Voltage dip	70 %
Number of periods	25 periods
Additional text	Class 3
Comments	Criterion A
Voltage dip	40 %
Number of periods	10 periods
Additional text	Class 3
Comments	Criterion A
Voltage dip	0 %
Number of periods	1 period
Additional text	Class 3
Comments	Criterion A

Criteria

Criterion A	Normal operating behavior within the specified limits.

Criterion B	Temporary impairment to operational behavior that is corrected by the device itself.
Criterion C	Temporary adverse effects on the operating behavior, which the device corrects automatically or which can be restored by actuating the operating elements.

Drawings

Dimensional drawing

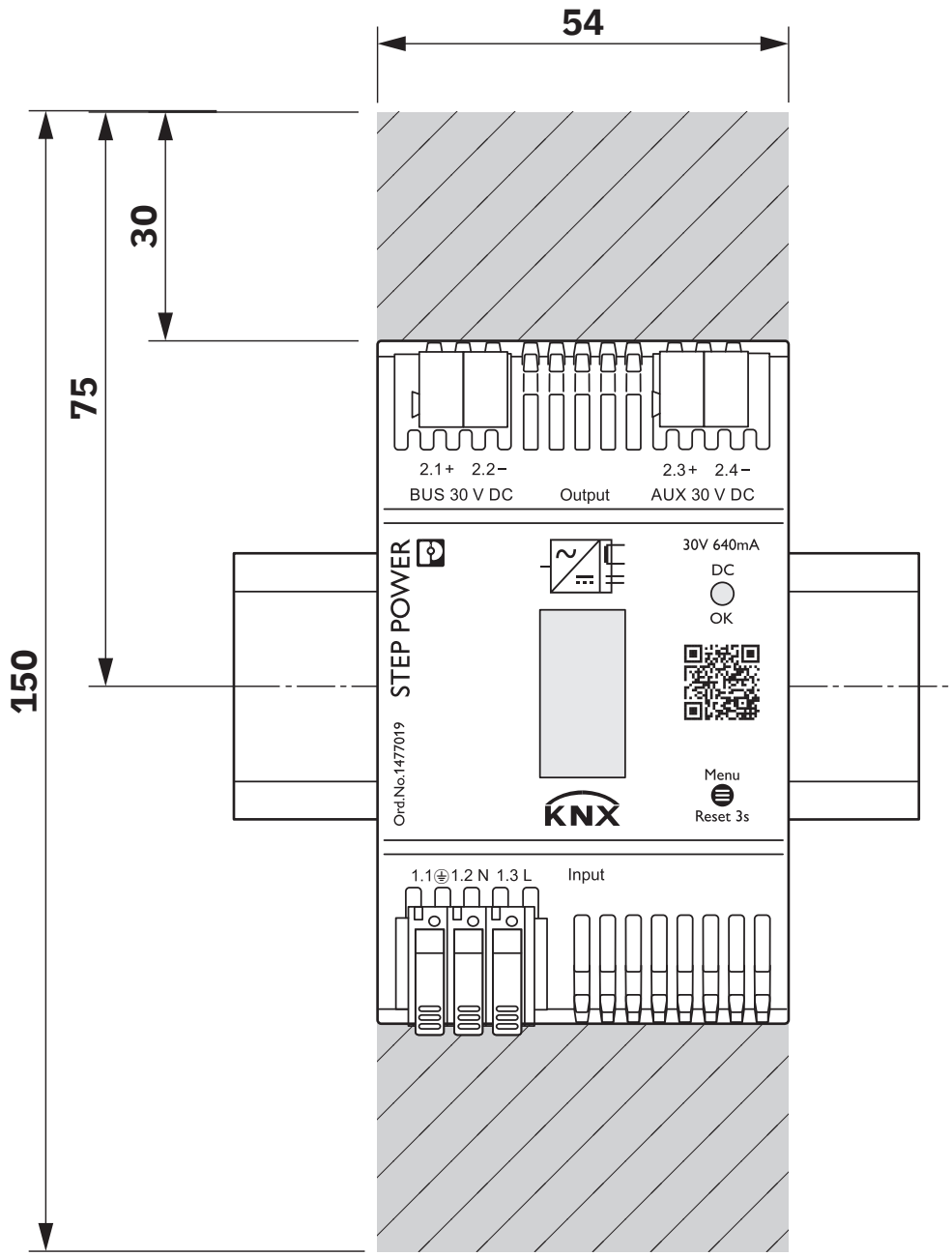

Device dimensions (dimensions in mm)

Dimensional drawing

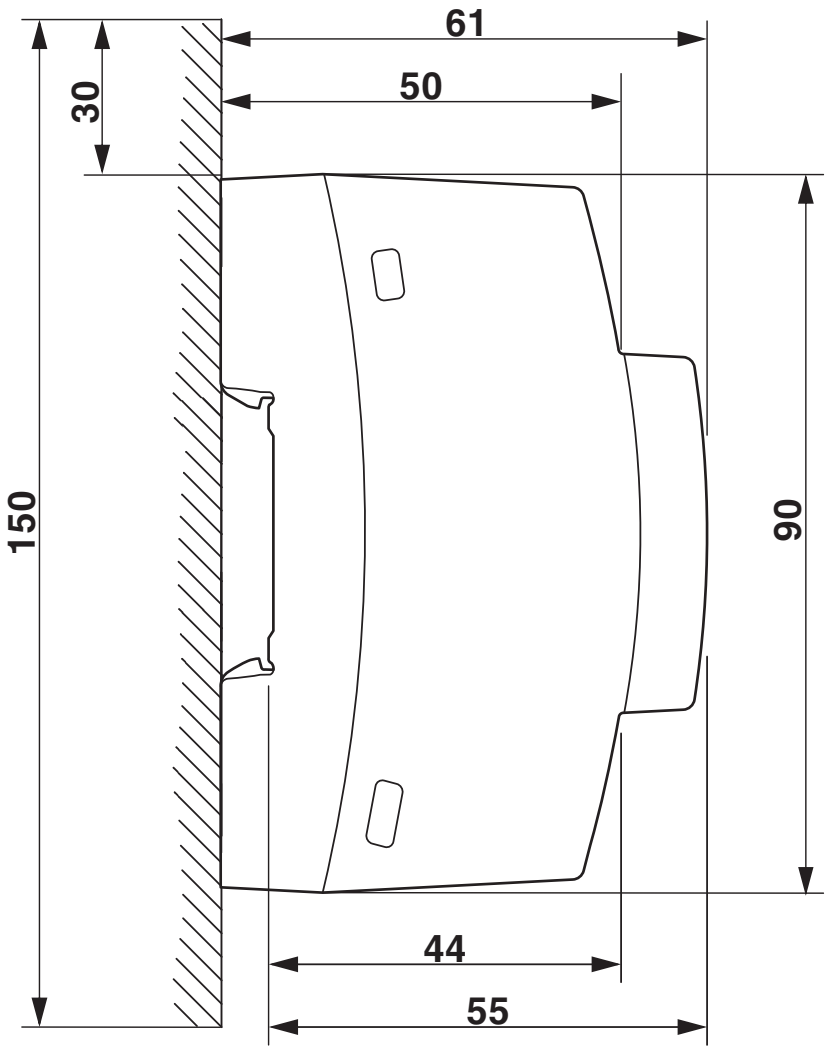

Device dimensions (dimensions in mm)

Diagram

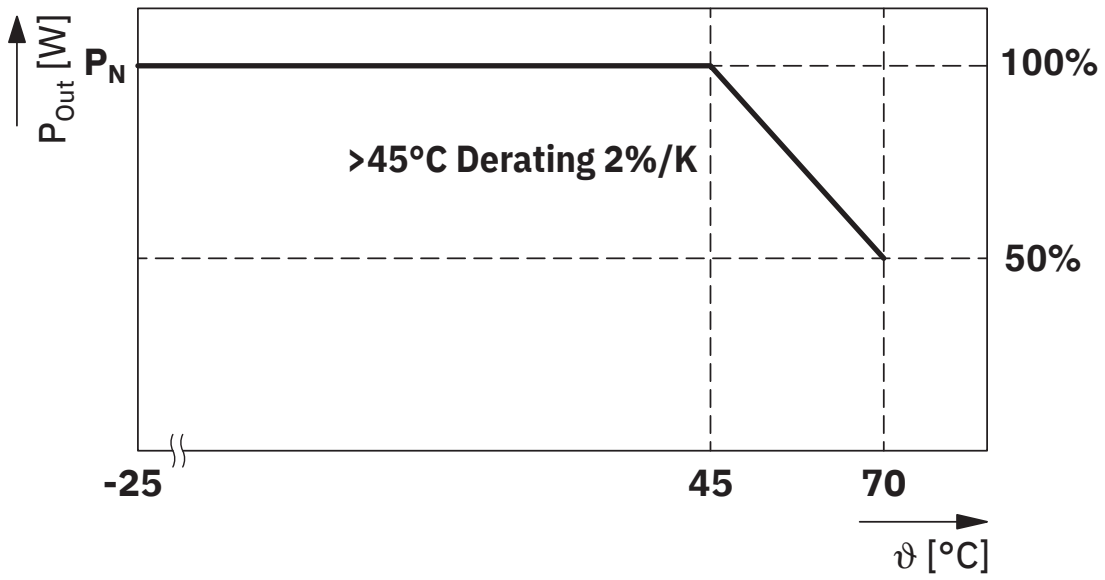

Output power/installation altitude

Block diagram

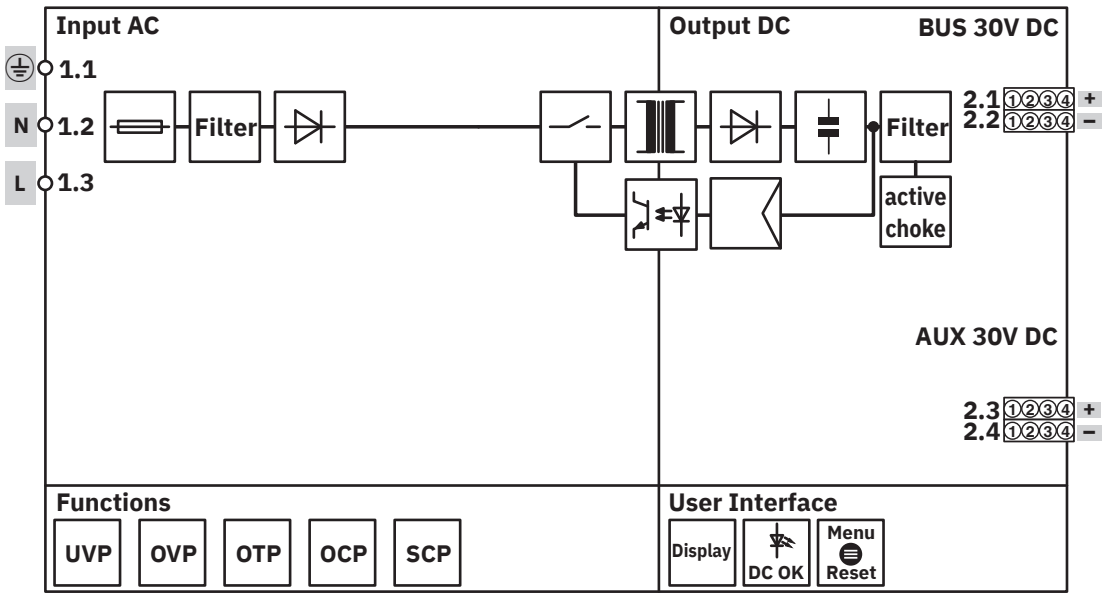

Block diagram

Approvals

To download certificates, visit the product detail page: https://www.phoenixcontact.com/gb/products/1477019

IECEE CB Scheme
Approval ID: SI-12987

cULus Listed
Approval ID: E123528-20240313

IECEE CB Scheme
Approval ID: SI-12900

IECEE CB Scheme
Approval ID: SI-12899

Classifications

ECLASS

ECLASS-13.0	27040701
ECLASS-15.0	27040701

ETIM

ETIM 10.0	EC002540

UNSPSC

UNSPSC 21.0	39121000

Environmental product compliance

EU RoHS

Fulfills EU RoHS substance requirements	Yes
Exemption	6(c), 7(c)-I

China RoHS

Environment friendly use period (EFUP)	EFUP-25
	An article-related China RoHS declaration table can be found in the download area for the respective article under "Manufacturer declaration". For all articles with EFUP-E, no China RoHS declaration table issued and required.

EU REACH SVHC

REACH candidate substance (CAS No.)	Lead(CAS: 7439-92-1)

Phoenix Contact 2026 © - all rights reserved
https://www.phoenixcontact.com

PHOENIX CONTACT Ltd
Halesfield 13, Telford
Shropshire, TF7 4PG
01952 681700
info@phoenixcontact.co.uk