PRC 20/5-C1-FT25-FC2,5 SET50 - Device connector front mounting

1468393

https://www.phoenixcontact.com/gb/products/1468393

Please be informed that the data shown in this PDF document is generated from our online catalog. Please find the complete data in the user documentation. Our general terms of use for downloads are valid.

CRIMP



Device connector front mounting, Range of articles: PRC 20, color: black, number of positions: 5, min. conductor cross-section: 0.5 mm^2, max. conductor cross-section: 2.5 mm^2, rated voltage: 400 V AC, rated current: 20 A, Connection method: Crimp connection, Setting option for release: 1. with a tool or 2. by hand

Your advantages

- More space on the device front with current transmission up to 20 A in a minimum amount of space
- Duo-Unlock technology for greater flexibility during installation and maintenance
- Reliable use under extreme ambient conditions with high degrees of protection and impact resistance
- Simple handling with proven crimp or screw connection technology
- Mechanical and color coding for quick and error-free startup

Commercial data

Item number	1468393
Packing unit	50 pc
Minimum order quantity	50 pc
Sales key	ABLHAC
Product key	ABLHAC
GTIN	4063151865467
Weight per piece (including packing)	17.64 g
Weight per piece (excluding packing)	15.267 g
Customs tariff number	85389099
Country of origin	PL

Technical data

Notes

Order information:	Setting option for release: 1. with a tool or 2. by hand
Note on application	For assembly notes, please refer to the packing slip

Product properties

Product type	Panel feed-through
Product family	PRC 20
Number of positions	5
Connection profile	4+PE
Coding	5-C1

Insulation characteristics

Protection class	II

Connection data

Connection technology

Connection method	Crimp connection

Dimensions

Dimensional drawing	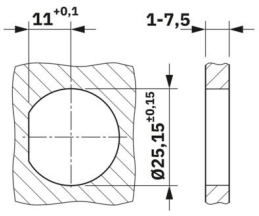
Width	34 mm
Height	38.4 mm
Length	52 mm

Electrical properties

Rated voltage	400 V AC (III/2) in accordance with IEC 61535/2 PfG 1915
	600 V AC / DC (III/2) in accordance with UL 2238 / UL 2237
	500 V DC (III/2) in accordance with IEC 61535
Rated current	20 A (With 2.5 mm² conductor cross-section in accordance with IEC 61984)

Material specifications

Color (Housing)	black (RAL 9005)

Cable/line

Single wire, cross section	0.5 mm² 2.5 mm²

Environmental and real-life conditions

Temperature rise

Specification	DIN EN 60512-5-1:2003-01 (following)
Requirements	The specified upper limiting temperature must not be exceeded.
Upper limiting temperature	105 °C
Specification	IEC 60512-11-10:2002-02
Requirements, visual check	No damage that can affect the intended use.
Cold stress	-40 °C/2 h
Specification	IEC 60512-11-9:2002-02
Requirements, visual check	No damage that can affect the intended use.
Thermal stress	105 °C/168 h

IP code X8 - continuous immersion

Specification	IEC 60529:1989-11 + AMD 1:1999-11 + AMD 2:2013-08
Requirements	Water may not penetrate in a harmful quantity when the housing is submerged in water continuously under conditions to be agreed between the manufacturer and user. However, the conditions must be more stringent than those of digit 7.
Test duration	2 h

Electrical tests

Specification	IEC 60352-2:2006-02
Connection method	Crimp connections

Impulse withstand voltage

Specification	IEC 60060-1:2010-09
Requirements, dielectric strength	No disruptive charge or sparkover
Additional text	The values specified apply to all repetitions of the same test within the normative test sequence.

Voltage proof

Specification	IEC 60512-4-1:2003-05
Requirements, dielectric strength	No disruptive charge or sparkover
Test voltage	3.31 kV AC
Additional text	The values specified apply to all repetitions of the same test within the normative test sequence.

Mechanical tests

Specification	IEC 60512-1-1:2002-02
Requirements, visual check	No defects that impair normal functionality.
Additional text	The values specified apply to all repetitions of the same test within the normative test sequence.

Dimensional examination

Specification	IEC 60512-1-2:2002-02
Requirements	There are releases available for all singleparts for the current revision status.
Specification	IEC 60512-13-2:2006-02
Requirements, insertion and withdrawal forces	No abrasion down to base material
No. of cycles	100

Polarization and coding

Specification	IEC 60512-13-5:2006-02
Insertion force	1,5 x mating force; 80 N max.

Provisions for earthing

Specification	IEC 61984:2008-10
Requirements	A protective contact connects first and disconnects last.

Contact retention in insert

Specification	IEC 60512-15-1:2008-05
Requirements	No axial offset should occur that can affect functions.

Cable clamp resistance to cable pull

Specification	IEC 60512-17-3:2010-06
Requirements	The permissible displacement or twisting must not exceed the values specified in the relevant standards based on the conductor properties.

Cable clamp resistance to cable torsion

Specification	IEC 60512-17-4:2010-06
Requirements	The permissible displacement or twisting must not exceed the values specified in the relevant standards based on the conductor properties.
Requirements, visual check	Loose parts or damage that would impair functionality are not permitted.

Mechanical strength impact

Specification	IEC 60512-7-2:2011-11
Requirements, visual check	Loose parts or damage that would impair functionality are not permitted.

Drawings

Dimensional drawing

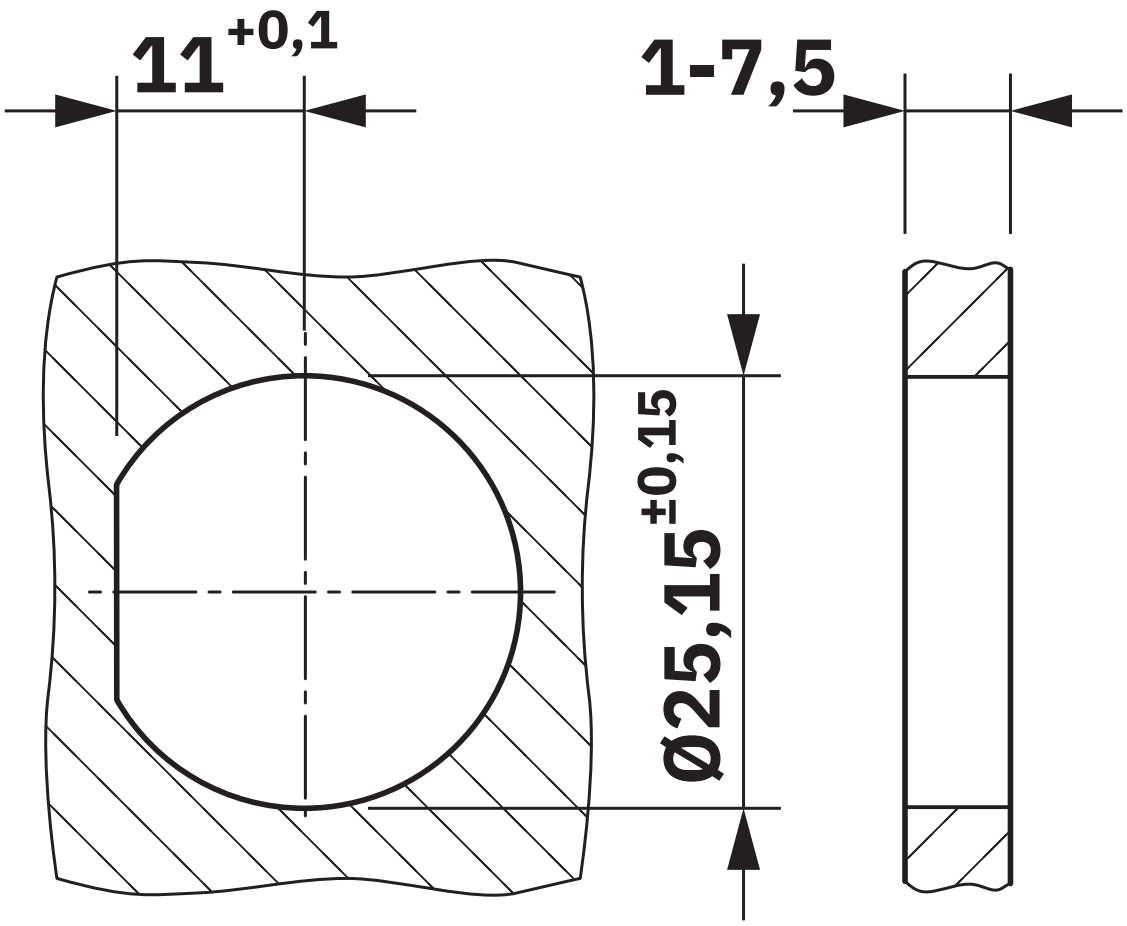

Diagram

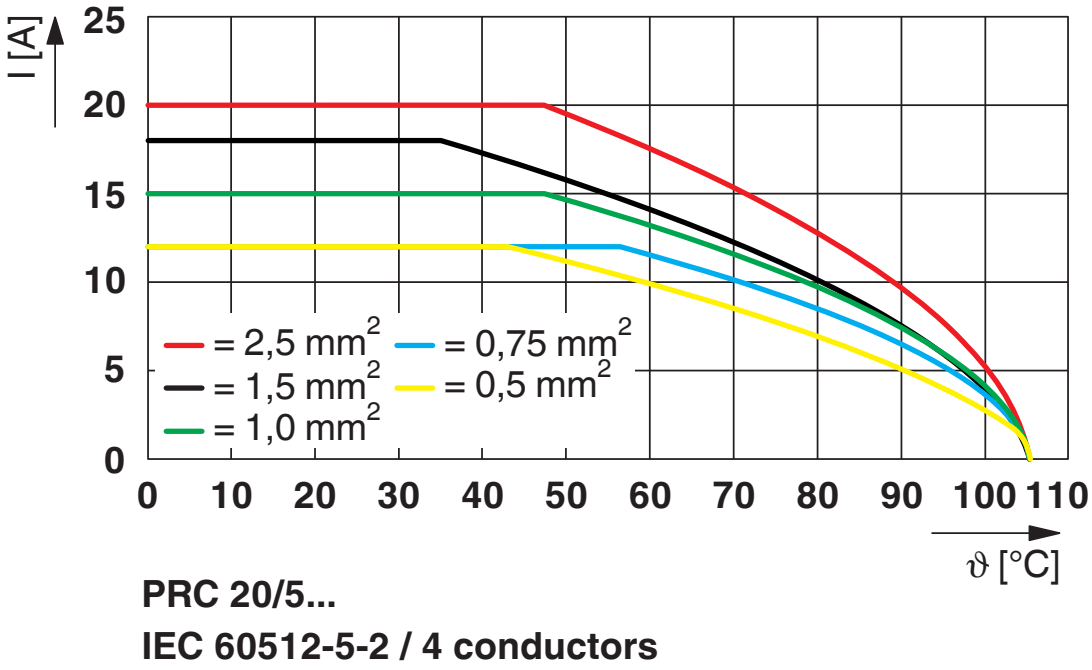

Derating

Classifications

ECLASS

ECLASS-13.0	27440602
ECLASS-15.0	27440602

ETIM

ETIM 10.0	EC002566

Environmental product compliance

EU RoHS

Fulfills EU RoHS substance requirements	Yes, No exemptions

China RoHS

Environment friendly use period (EFUP)	EFUP-E
	No hazardous substances above the limits

EU REACH SVHC

REACH candidate substance (CAS No.)	Triphenyl phosphate(CAS: 115-86-6)

Phoenix Contact 2026 © - all rights reserved
https://www.phoenixcontact.com

PHOENIX CONTACT Ltd
Halesfield 13, Telford
Shropshire, TF7 4PG
01952 681700
info@phoenixcontact.co.uk