HC-CIF-B06-24-BFAFL-PL - DIN rail mounting frame

1424338

https://www.phoenixcontact.com/gb/products/1424338

Please be informed that the data shown in this PDF document is generated from our online catalog. Please find the complete data in the user documentation. Our general terms of use for downloads are valid.



DIN rail mounting frame, B6 - B24, for contact inserts, Base frame

Commercial data

Item number	1424338
Packing unit	1 pc
Minimum order quantity	1 pc
Sales key	AF7AHB
Product key	AF7AHB
GTIN	4055626370767
Weight per piece (including packing)	93 g
Weight per piece (excluding packing)	86.4 g
Customs tariff number	85389099
Country of origin	CN

Technical data

Notes

General	for B, BB, DD, HV contact inserts and module frame
Notes on safety	Protection against electric shock must be ensured by the user. The continuity of the PE connection must be verified and satisfied by the user. The PE connection must be implemented equilaterally.

Product properties

Product type	DIN rail mounting frame
Housing type	DIN rail mounting frame
Series	HC-CIF-PL
Type	B6 - B24
Protective cover	no
Pg screw connection	none

Dimensions

Dimensional drawing	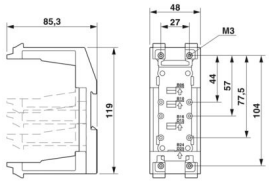
Width	48 mm
Height	86 mm
Length	120 mm

Material specifications

Material	PC
Flammability rating according to UL 94	V0

Mechanical properties

Mechanical data

Locking type	Catch

Environmental and real-life conditions

Ambient conditions

Ambient temperature (operation)	-40 °C ... 125 °C

Mounting

Mounting type	DIN rail: 35 mm
Assembly note	To ensure correct use, installation in an IP-protected space is required

Drawings

Dimensional drawing

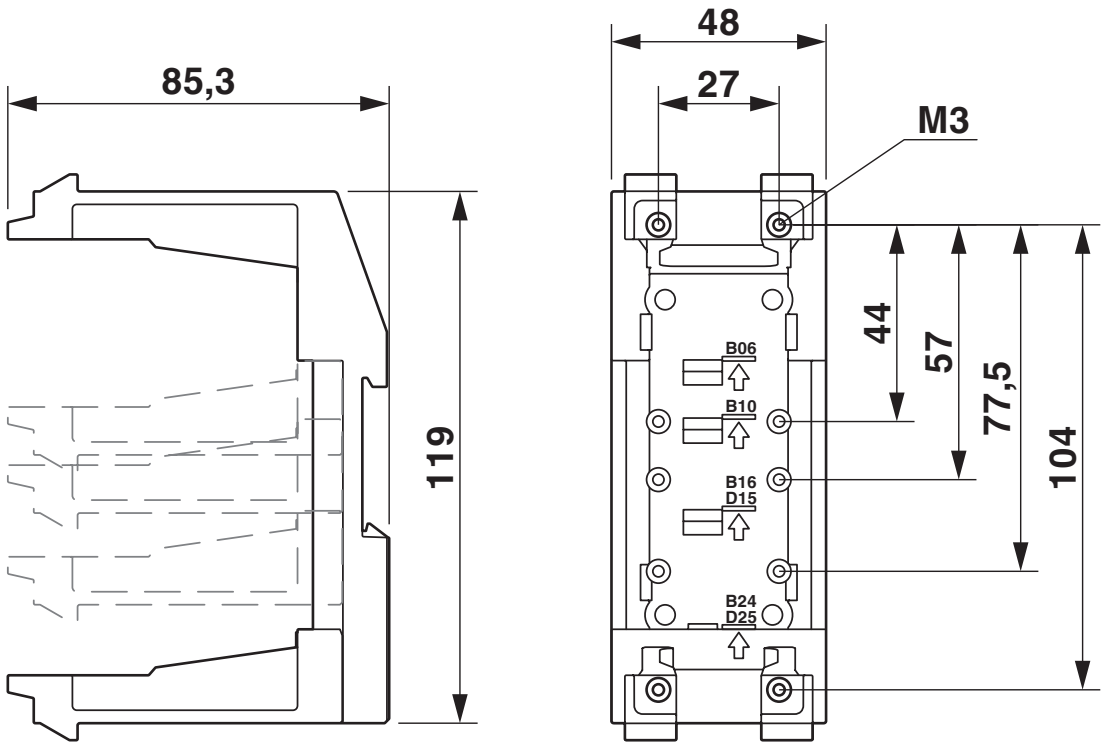

Dimensional drawing

Approvals

To download certificates, visit the product detail page: https://www.phoenixcontact.com/gb/products/1424338

cUL Recognized
Approval ID: E118976

UL Recognized
Approval ID: E118976

Classifications

ECLASS

ECLASS-13.0	27440210
ECLASS-15.0	27440210

ETIM

ETIM 10.0	EC002310

UNSPSC

UNSPSC 21.0	39121400

Environmental product compliance

EU RoHS

Fulfills EU RoHS substance requirements	Yes, No exemptions

China RoHS

Environment friendly use period (EFUP)	EFUP-E
	No hazardous substances above the limits

EU REACH SVHC

REACH candidate substance (CAS No.)	No substance above 0.1 wt%

Phoenix Contact 2026 © - all rights reserved
https://www.phoenixcontact.com

PHOENIX CONTACT Ltd
Halesfield 13, Telford
Shropshire, TF7 4PG
01952 681700
info@phoenixcontact.co.uk