# HC-CIF-B24-HFWL-PL - DIN rail mounting frame

1424337

https://www.phoenixcontact.com/gb/products/1424337

Please be informed that the data shown in this PDF document is generated from our online catalog. Please find the complete data in the user documentation. Our general terms of use for downloads are valid.



DIN rail mounting frame, B24, for contact inserts, Top frame

## Commercial data

| | |
|---|---|
| Item number | 1424337 |
| Packing unit | 1 pc |
| Minimum order quantity | 1 pc |
| Sales key | AF7AHB |
| Product key | AF7AHB |
| GTIN | 4055626370750 |
| Weight per piece (including packing) | 53 g |
| Weight per piece (excluding packing) | 51.6 g |
| Customs tariff number | 85389099 |
| Country of origin | CN |

## Technical data

### Notes

| | |
|---|---|
| General | for B24, BB48, DD108, HV10 contact inserts and B24 module frame |
| Notes on safety | Protection against electric shock must be ensured by the user. The continuity of the PE connection must be verified and satisfied by the user. The PE connection must be implemented equilaterally. |

### Product properties

| | |
|---|---|
| Product type | DIN rail mounting frame |
| Housing type | DIN rail mounting frame |
| Series | HC-CIF-PL |
| Type | B24 |
| Protective cover | no |
| Pg screw connection | none |

### Dimensions

| | |
|---|---|
| Dimensional drawing | 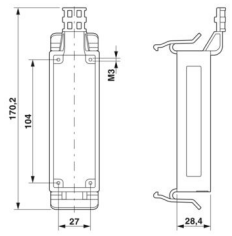 |
| Width | 42 mm |
| Height | 61 mm |
| Length | 170 mm |

### Material specifications

| | |
|---|---|
| Material | PC |
| Flammability rating according to UL 94 | V0 |

### Mechanical properties

Mechanical data

| | |
|---|---|
| Locking type | Clip |

### Environmental and real-life conditions

Ambient conditions

| | |
|---|---|
| Ambient temperature (operation) | -40 °C ... 125 °C |

### Mounting

| | |
|---|---|
| Assembly note | To ensure correct use, installation in an IP-protected space is required |

## Drawings

Dimensional drawing

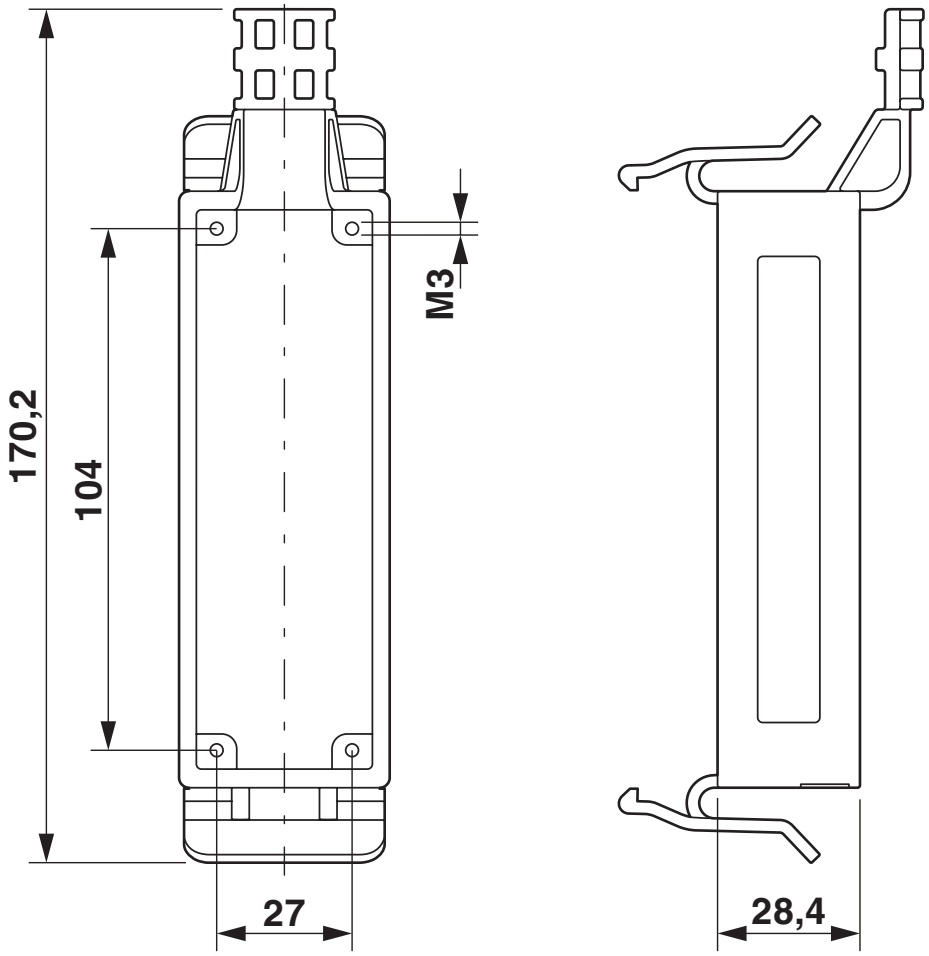


Dimensional drawing

## Approvals

To download certificates, visit the product detail page: https://www.phoenixcontact.com/gb/products/1424337

**cUL Recognized**
Approval ID: E118976

**UL Recognized**
Approval ID: E118976

## Classifications

### ECLASS

| | |
|---|---|
| ECLASS-13.0 | 27440210 |
| ECLASS-15.0 | 27440210 |

### ETIM

| | |
|---|---|
| ETIM 10.0 | EC002310 |

### UNSPSC

| | |
|---|---|
| UNSPSC 21.0 | 39121400 |

## Environmental product compliance

EU RoHS

| | |
|---|---|
| Fulfills EU RoHS substance requirements | Yes, No exemptions |

China RoHS

| | |
|---|---|
| Environment friendly use period (EFUP) | EFUP-E |
| | No hazardous substances above the limits |

EU REACH SVHC

| | |
|---|---|
| REACH candidate substance (CAS No.) | No substance above 0.1 wt% |

EF3.1 Climate Change

| | |
|---|---|
| CO2e kg | 0.362 kg CO2e |


Phoenix Contact 2026 © - all rights reserved
https://www.phoenixcontact.com



PHOENIX CONTACT Ltd
Halesfield 13, Telford
Shropshire, TF7 4PG
01952 681700
info@phoenixcontact.co.uk