HC-EVO-D15-BWS-PLR-BK - Housing

1411336

https://www.phoenixcontact.com/gb/products/1411336

Please be informed that the data shown in this PDF document is generated from our online catalog. Please find the complete data in the user documentation. Our general terms of use for downloads are valid.



Panel mounting base D15, with single locking latch, material: PA 6.6-FR, height: 26 mm, cable gland: none, Standard, with flat gasket

Your advantages

- Lower costs than metal version
- Low weight
- Lower risk of condensation

Commercial data

Item number	1411336
Packing unit	1 pc
Minimum order quantity	1 pc
Sales key	AF7APN
Product key	AF7APN
GTIN	4046356929080
Weight per piece (including packing)	47.5 g
Weight per piece (excluding packing)	46.3 g
Customs tariff number	85389099
Country of origin	PL

Technical data

Notes

General	For contact inserts HC-D15, A10

Product properties

Product type	Housing with locking latch
Housing type	Panel mounting base
Product family	HC-EVO-D
Application	Standard
Type	D15
Pg screw connection	none

Dimensions

Dimensional drawing	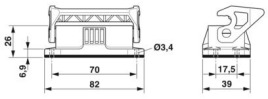
Width	39 mm
Height	26 mm
Length	82 mm
Drill hole distance, horizontal	70 mm
Drill hole distance, vertical	17.5 mm
Hole diameter	3.3 mm

Installation dimensions

Width of the assembly cutout	24 mm
Length of the assembly cutout	58 mm

Material specifications

Flammability rating according to UL 94	V0 (Housing)
	V0 (Interlock)
Seal material	NBR (Flat gasket)
Housing material	PA 6.6-FR
Locking latch material	PA

Mechanical properties

Mechanical data

Locking type	Latch

Connection data

Tightening torque	0.5 Nm ... 0.8 Nm (For M3 mounting screws on the panel-mount base)

Environmental and real-life conditions

Ambient conditions

Degree of protection	IP66
Enclosure rating (NEMA)	12 (UL 50e)
Impact strength	IK08
Ambient temperature (operation)	-40 °C ... 125 °C

Drawings

Dimensional drawing

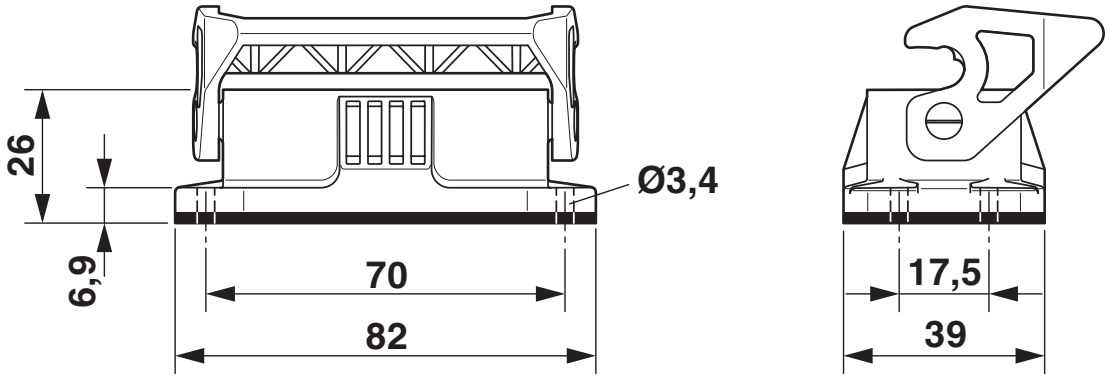

Dimensional drawing

Dimensional drawing

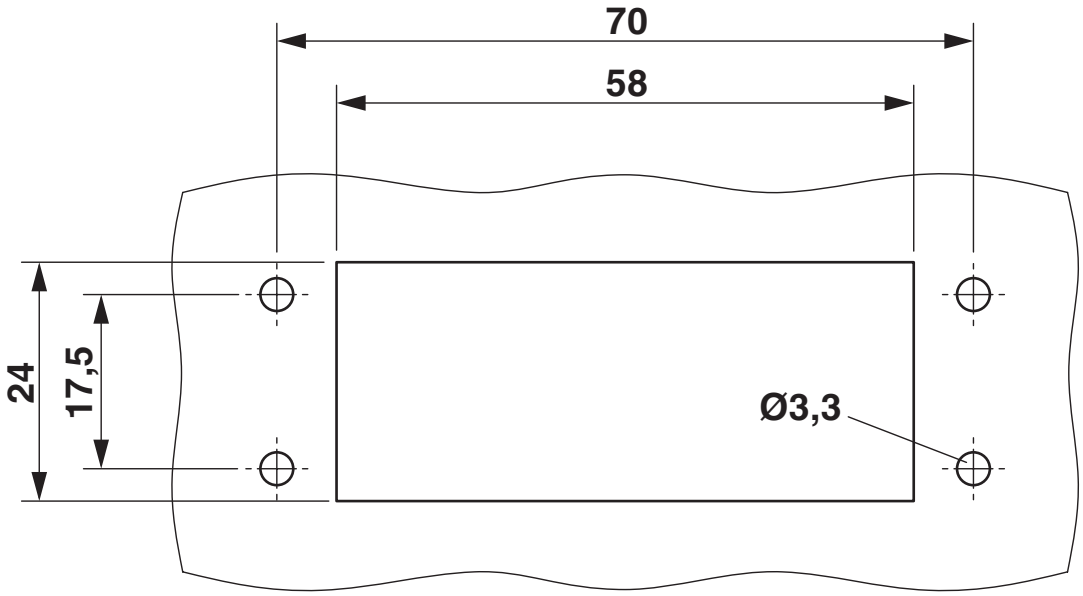

Mounting cutout

Approvals

To download certificates, visit the product detail page: https://www.phoenixcontact.com/gb/products/1411336

DNV
Approval ID: TAE000037S

Classifications

ECLASS

ECLASS-13.0	27440202
ECLASS-15.0	27440202

ETIM

ETIM 10.0	EC000437

UNSPSC

UNSPSC 21.0	31261500

Environmental product compliance

EU RoHS

Fulfills EU RoHS substance requirements	Yes, No exemptions

China RoHS

Environment friendly use period (EFUP)	EFUP-E
	No hazardous substances above the limits

EU REACH SVHC

REACH candidate substance (CAS No.)	No substance above 0.1 wt%

Phoenix Contact 2026 © - all rights reserved
https://www.phoenixcontact.com

PHOENIX CONTACT Ltd
Halesfield 13, Telford
Shropshire, TF7 4PG
01952 681700
info@phoenixcontact.co.uk