HC-B24-I-PT-M - Contact insert

1407736

https://www.phoenixcontact.com/gb/products/1407736

Please be informed that the data shown in this PDF document is generated from our online catalog. Please find the complete data in the user documentation. Our general terms of use for downloads are valid.

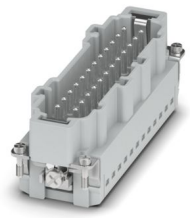

Contact insert, number of positions: 24+PE, size: B24, number of connections per position: 1, Pin, Push-in connection, 500 V, 16 A, 0.14 mm^2 ... 2.5 mm^2, application: Power

Your advantages

- Easy installation without tools, even when mounted, with push-in connection technology
- Shortest installation time compared to other connection technologies
- Quick and effortless wiring, in particular when space is tight
- Automatic cabling with robots possible
- Safe wiring and operation with color-coded actuators
- Shock and vibration-resistant in accordance with DIN EN 61373
- Cost-effective and fast coding with plastic profiles
- Test pick-off for 2 mm test plug

Commercial data

Item number	1407736
Packing unit	1 pc
Minimum order quantity	1 pc
Sales key	AF7ABC
Product key	AF7ABC
GTIN	4046356777711
Weight per piece (including packing)	102.8 g
Weight per piece (excluding packing)	102.3 g
Customs tariff number	85366990
Country of origin	CN

Technical data

Notes

General	only use flexible conductors with ferrules
General	Connectors may be operated only when there is no load/voltage.

Mounting

Assembly note	To ensure correct use, installation in housing with IP54 protection or better is required

Product properties

Product type	Contact insert with a fixed no. of positions
Series	HC-B
Application	Power
Type	B24
	B48
Number of positions	24
Connection profile	24+PE
Contact numbering	1 - 24
Number of connections per position	1
Contact material type	rolled

Insulation characteristics

Overvoltage category	III
Degree of pollution	3

Dimensions

Dimensional drawing	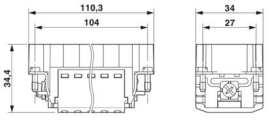
Width	34 mm
Height	34.4 mm
Length	111 mm
Drill hole distance, horizontal	104 mm
Drill hole distance, vertical	27 mm

Mechanical characteristics

Contact diameter	2.5 mm

Connection data

Connection technology

Connection technology	Push-in connection
Number of connections per position	1

Conductor connection

Conductor cross-section	0.14 mm² ... 2.5 mm²
Connection cross section AWG	26 ... 14
Tightening torque	0.8 Nm ... 1.2 Nm (PE connection)
	0.5 Nm ... 0.8 Nm (Mounting screws for mounting in the HEAVYCON housing)
Stripping length	8 mm ... 10 mm

Electrical properties

Rated voltage (III/3)	500 V
Rated surge voltage	6 kV
Rated current	16 A (power contacts)
SCCR	5 kA (UL 2237)

Mechanical properties

Mechanical data

Insertion/withdrawal cycles	≥ 500

Material specifications

Flammability rating according to UL 94	V0
Contact material	Copper alloy
Contact surface material	Ag/Sn (tarnish protection)
Contact carrier material	PC

Environmental and real-life conditions

Ambient conditions

Ambient temperature (operation)	-40 °C ... 125 °C (including heating up of contacts)

Standards and regulations

Standards/regulations	PC: Fire protection in rail vehicles - requirement sets R22, R23, and R24 acc. to DIN EN 45545-2 (Risk level HL1 - HL3)

Drawings

Dimensional drawing

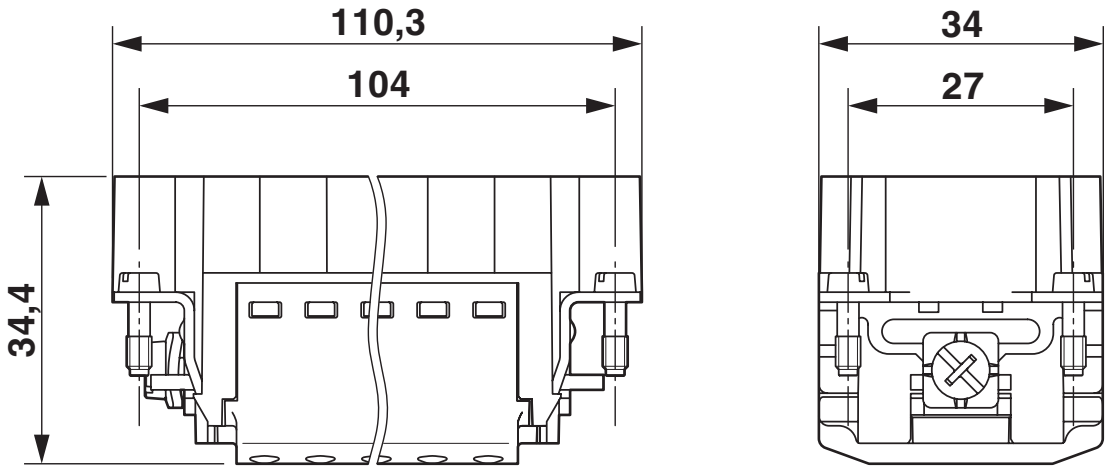

Dimensional drawing

Dimensional drawing

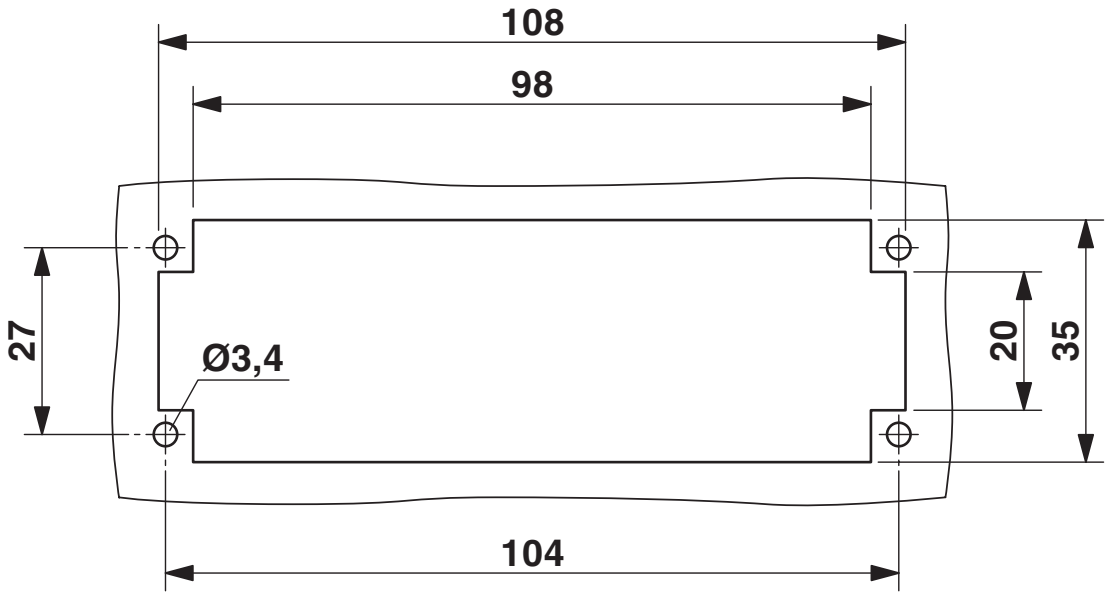

Mounting cutout when used without housing

Schematic diagram

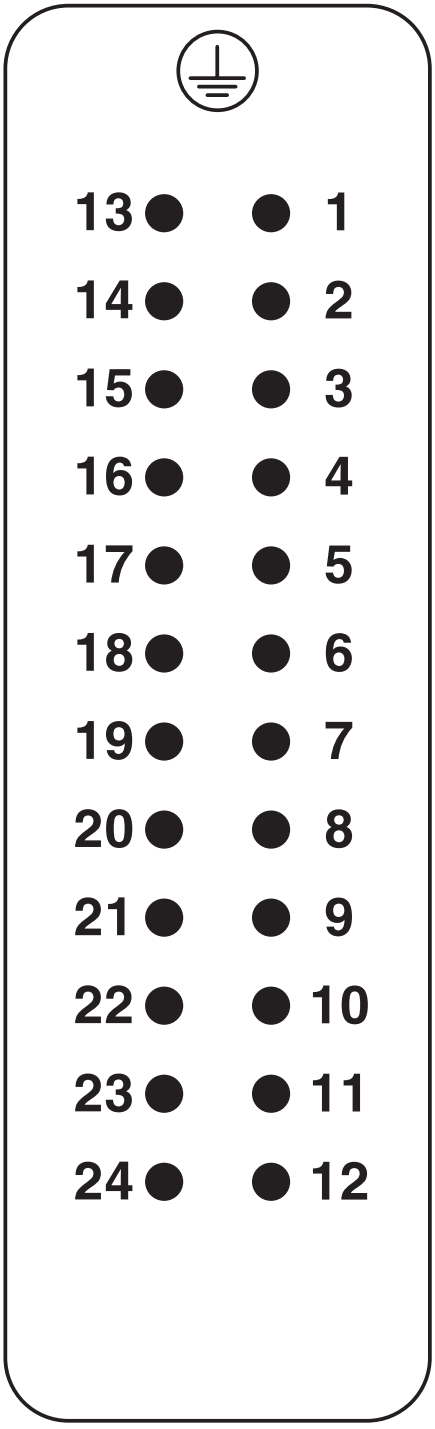

Connector pin assignment, connection side

Diagram

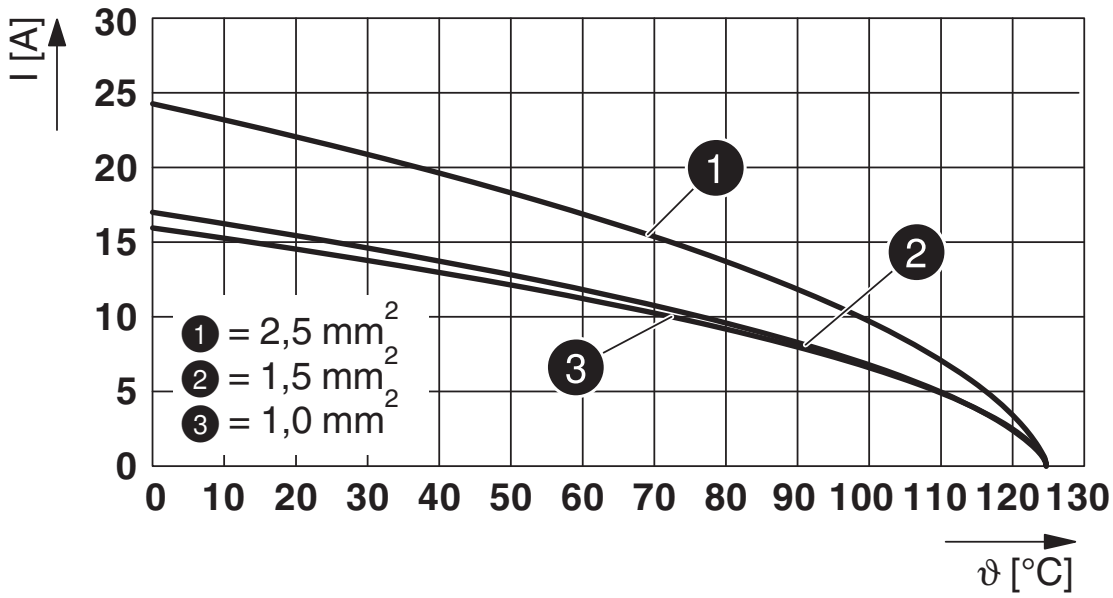

Derating diagram

Approvals

To download certificates, visit the product detail page: https://www.phoenixcontact.com/gb/products/1407736

DNV
Approval ID: TAE000037S

CSA
Approval ID: 13631

	Nominal voltage U_N	Nominal current I_N	Cross section AWG	Cross section mm^2
keine				
	600 V	10 A	- 14	-

UL Recognized
Approval ID: E118976

	Nominal voltage U_N	Nominal current I_N	Cross section AWG	Cross section mm^2
keine				
	600 V	13 A	- 14	-

cULus Recognized
Approval ID: E468743

	Nominal voltage U_N	Nominal current I_N	Cross section AWG	Cross section mm^2
keine				
	600 V	13 A	14 - 12	-

Classifications

ECLASS

ECLASS-13.0	27440205
ECLASS-15.0	27440205

ETIM

ETIM 10.0	EC000438

UNSPSC

UNSPSC 21.0	39121500

Environmental product compliance

EU RoHS

Fulfills EU RoHS substance requirements	Yes, No exemptions

China RoHS

Environment friendly use period (EFUP)	EFUP-E
	No hazardous substances above the limits

EU REACH SVHC

REACH candidate substance (CAS No.)	No substance above 0.1 wt%

Phoenix Contact 2026 © - all rights reserved
https://www.phoenixcontact.com

PHOENIX CONTACT Ltd
Halesfield 13, Telford
Shropshire, TF7 4PG
01952 681700
info@phoenixcontact.co.uk