UNO2-PS/1AC/12DC/120W/SC - Power supply

1399940

https://www.phoenixcontact.com/gb/products/1399940

Please be informed that the data shown in this PDF document is generated from our online catalog. Please find the complete data in the user documentation. Our general terms of use for downloads are valid.



Primary-switched power supply unit UNO POWER, Screw connection, DIN rail mounting, input: 1-phase, output: 12 V DC / 10 A, adjustable from 12 V DC ... 15 V DC

Product description

UNO POWER – compact, high-efficiency power supply
The UNO POWER power supplies are the ideal solution for industrial applications where compact design and reliable performance are required. With a high power density and basic functionality, the AC/DC power supply units reliably supply loads with constant load behavior – and at powers ranging from 25 W to 960 W.
The new generation up to 90 W also impresses with Push-in connection technology and an extended input voltage range up to 277 V AC, which makes installation even easier and more flexible.

Your advantages

- Save space in the control cabinet with an extremely narrow overall width of just 35 mm
- Save energy, thanks to a high degree of efficiency
- Outdoor installation possible, with a wide temperature range of -25°C … +70°C
- Simple output voltage monitoring, thanks to the floating DC OK relay contact

Commercial data

Item number	1399940
Packing unit	1 pc
Minimum order quantity	1 pc
Sales key	CMPV12
Product key	CMPV12
GTIN	4063151785246
Weight per piece (including packing)	476 g
Weight per piece (excluding packing)	369 g
Customs tariff number	85044095
Country of origin	VN

Technical data

Input data

AC operation

Supply system configuration	TN, TT, IT (PE)
Nominal input voltage range	100 V AC ... 240 V AC
Input voltage range	100 V AC ... 240 V AC -15 % ... +10 %
Typical national grid voltage	120 V AC
	230 V AC
Voltage type of supply voltage	AC
Inrush current	typ. 35 A (at 25 °C)
Inrush current integral (I^2t)	< 0.3 A^2s
Frequency range (f_N)	50 Hz ... 60 Hz ±10 %
Mains buffering time	typ. 25 ms (120 V AC)
	typ. 27 ms (230 V AC)
Current consumption	1.32 A (100 V AC)
	1.1 A (120 V AC)
	0.58 A (230 V AC)
	0.56 A (240 V AC)
Protective circuit	Transient surge protection; Varistor
Switch-on time	typ. 1 s
Device mains fuse	3.15 A internal (device protection), slow-blow
Recommended breaker for input protection	6 A ... 20 A (Characteristic B, C, D, K or comparable)
Discharge current to PE	< 0.25 mA
Voltage type of supply voltage	DC

Output data

Efficiency	typ. 93.1 % (120 V AC)
	typ. 94.4 % (230 V AC)
Nominal output voltage	12 V DC
Setting range of the output voltage (U_{Set})	12 V DC ... 15 V DC (> 12 V DC, constant capacity restricted)
Nominal output current (I_N)	10 A
Short-circuit-proof	yes
Crest factor	typ. 1.68 (120 V AC)
	typ. 1.83 (230 V AC)
Output power (P_N)	120 W
Connection in parallel	yes, for increasing power and redundancy with diode
Connection in series	yes, for increased output voltage
Feedback voltage resistance	≤ 25 V DC
Protection against overvoltage at the output (OVP)	≤ 25 V DC
Residual ripple	typ. 25 mV_{PP} (with nominal values)
Control deviation	< 1 % (change in load, static 10 % ... 90 %)
	< 3 % (change in load, dynamic 10 % ... 90 %)

	< 0.1 % (change in input voltage ±10 %)
Rise time	< 1 s (U_{Out} = 10 % ... 90 %)
Minimum no-load power dissipation	< 0.55 W (120 V AC)
Maximum no-load power dissipation	< 0.4 W (230 V AC)
Minimum nominal load power dissipation	< 9 W (120 V AC)
Power loss nominal load max.	< 7 W (230 V AC)
Integrated fuse protection	no
Fuse protection (secondary side)	electronic

Connection data

Input

Position	1.x
Identification	1.1 (L), 1.2 (N)

Conductor connection

Connection method	Screw connection
rigid	0.2 mm² ... 2.5 mm²
flexible	0.2 mm² ... 2.5 mm²
flexible with ferrule without plastic sleeve	0.25 mm² ... 2.5 mm²
flexible with ferrule with plastic sleeve	0.25 mm² ... 2.5 mm²
rigid (AWG)	24 ... 14 (Cu)
AWG	24 ... 14 (Cu)
Stripping length	8 mm
Tightening torque (EU)	0.5 Nm ... 0.6 Nm
Tightening torque ()	4 lb_f-in. ... 5 lb_f-in.
Drive form screw head	Slotted L
Screwdriver blade	0.6 x 3.5 mm

Output

Position	2.x
Identification	2.1 (+), 2.2 (-)

Conductor connection

Connection method	Screw connection
rigid	0.2 mm² ... 2.5 mm²
flexible	0.2 mm² ... 2.5 mm²
flexible with ferrule without plastic sleeve	0.25 mm² ... 2.5 mm²
flexible with ferrule with plastic sleeve	0.25 mm² ... 2.5 mm²
rigid (AWG)	24 ... 14 (Cu)
AWG	24 ... 14 (Cu)
Stripping length	8 mm
Tightening torque (EU)	0.5 Nm ... 0.6 Nm
Tightening torque ()	4 lb_f-in. ... 5 lb_f-in.
Drive form screw head	Slotted L
Screwdriver blade	0.6 x 3.5 mm

Signal

Position	3.x
Identification	3.1 (13), 3.2 (14)

Conductor connection

Connection method	Screw connection
rigid	0.2 mm² ... 2.5 mm²
flexible	0.2 mm² ... 2.5 mm²
flexible with ferrule without plastic sleeve	0.25 mm² ... 2.5 mm²
flexible with ferrule with plastic sleeve	0.25 mm² ... 2.5 mm²
AWG	24 ... 14 (Cu)
Stripping length	8 mm
Tightening torque (EU)	0.5 Nm ... 0.6 Nm
Tightening torque ()	4 lb_f-in. ... 5 lb_f-in.
Drive form screw head	Slotted L
Screwdriver blade	0.6 x 3.5 mm

Signaling

LED signaling

Types of signaling	LED DC OK - signal state operation (U_N = 24 V DC, I_{Out} = I_N)
Function	Visual operating state display
Color	green

Signal output Relay 13/14

Position	3.x
Type of signaling	DC OK switch contact - signal state operation (U_N = 24 V DC, I_{Out} = I_N)
Position marking	3.1 (13), 3.2 (14)
Function	Operating state forwarding
Switch contact (floating)	OptoMOS
Switching voltage	max. 30 V AC/DC
	max. 60 V DC
Current carrying capacity	max. 50 mA
State condition (Contact closed)	U_{OUT} > 0,9 x U_N (Contact closed)
State condition (Contact open)	U_{OUT} < 0,9 x U_N (Contact open)

Electrical properties

Number of phases	1
Insulation voltage input/output	4 kV AC (type test)
	3.75 kV AC (routine test)

Product properties

Product type	Power supply
Product family	UNO POWER

MTBF (IEC 61709, SN 29500)	> 1501000 h (25 °C)
	> 913000 h (40 °C)
	> 515000 h (55 °C)

Insulation characteristics

Protection class	II
Overvoltage category (EN 61010-1)	II (≤ 5000 m)
Overvoltage category (EN 62477-1)	III (≤ 2000 m)
Degree of pollution	2

Life expectancy (electrolytic capacitors)

Current	5 A
Temperature	40 °C
Time	415000 h
Additional text	120 V AC

Life expectancy (electrolytic capacitors)

Current	5 A
Temperature	40 °C
Time	451000 h
Additional text	230 V AC

Life expectancy (electrolytic capacitors)

Current	7.5 A
Temperature	40 °C
Time	223000 h
Additional text	120 V AC

Life expectancy (electrolytic capacitors)

Current	7.5 A
Temperature	40 °C
Time	235000 h
Additional text	230 V AC

Life expectancy (electrolytic capacitors)

Current	10 A
Temperature	40 °C
Time	96000 h
Additional text	120 V AC

Life expectancy (electrolytic capacitors)

Current	10 A
Temperature	40 °C
Time	110000 h
Additional text	230 V AC

Life expectancy (electrolytic capacitors)

Current	10 A

Temperature	25 °C
Time	271000 h
Additional text	120 V AC

Life expectancy (electrolytic capacitors)

Current	10 A
Temperature	25 °C
Time	312000 h
Additional text	230 V AC

Dimensions

Item dimensions

Width	35 mm
Height	130 mm
Depth	129 mm
Depth (Device depth (DIN rail mounting))	125 mm (Device depth (DIN rail mounting))

Installation dimensions

Installation distance right/left	0 mm / 0 mm
Installation distance top/bottom	30 mm / 30 mm

Mounting

Mounting type	DIN rail mounting
Assembly note	alignable: 0 mm horizontally, 30 mm vertically
Mounting position	horizontal DIN rail NS 35, EN 60715

Material specifications

Flammability rating according to UL 94	V0 (Housing, terminal blocks)
Housing material	Plastic
Housing material	PC
Type of housing	Polycarbonate
Foot latch material	PBT (polybutylene terephthalate)

Environmental and real-life conditions

Ambient conditions

Degree of protection	IP20
Ambient temperature (operation)	-25 °C ... 70 °C (> 55 °C Derating: 2.5 %/K)
Ambient temperature (storage/transport)	-40 °C ... 85 °C
Ambient temperature (start-up type tested)	-40 °C
Maximum altitude	≤ 5000 m (> 2000 m, Derating: 10 %/1000 m)
Max. permissible relative humidity (operation)	≤ 95 % (at 25 °C, non-condensing)
Shock (operation)	18 ms, 30g, per spatial direction (IEC 60068-2-27)
Vibration (operation)	10 Hz ... 50 Hz, amplitude ±0.35 mm (IEC 60068-2-6)
	59.6 Hz ... 150 Hz, 5g, 20 cycles

Temp code	T4 (-25°C ... +70°C; >55°C, derating: 2.5 %/K)

Standards and regulations

Safety of power supply units up to 1100 V (insulation distances)

Standard designation	Safety of power supply units up to 1100 V (insulation distances)
Standards/specifications	DIN EN 61558-2-16

Electrical safety

Standard designation	Electrical safety
Standards/specifications	IEC 61010-2-201 (SELV)
Standard designation	Safety for equipment for measurement, control, and laboratory use
Standards/specifications	IEC 61010-1

Protective extra-low voltage

Standard designation	Protective extra-low voltage
Standards/specifications	IEC 61010-1 (SELV)
	IEC 61010-2-201 (PELV)

Safe isolation

Standard designation	Safe isolation
Standards/specifications	IEC 61558-2-16
	IEC 61010-2-201

Limitation of harmonic line currents

Standard designation	Limitation of harmonic line currents
Standards/specifications	EN 61000-3-2

Approvals

UL

Identification	UL/C-UL Listed UL 61010-1

UL

Identification	UL/C-UL Listed UL 61010-2-201

UL

Identification	UL/C-UL Listed ANSI/UL 121201 Class I, Division 2, Groups A, B, C, D (Hazardous Location)

SIQ

Identification	CB scheme (IEC 61010-1, IEC 61010-2-201)

EMC data

Electromagnetic compatibility	Conformance with EMC Directive 2014/30/EU
Low Voltage Directive	Conformance with Low Voltage Directive 2014/35/EC
Interference emission	Interference emission in accordance with EN 61000-6-3 (residential and commercial) and EN 61000-6-4 (industrial)

EMC requirements for noise immunity	EN 61000-6-2

Conducted noise emission

Standards/regulations	EN 55016
	EN 61000-6-3 (Class B)

Noise emission

Standards/regulations	EN 55016
	EN 61000-6-3 (Class B)

Harmonic currents

Standards/regulations	EN 61000-3-2
	EN 61000-3-2 (Class A)
Frequency range	0 kHz ... 2 kHz

Flicker

Standards/regulations	EN 61000-3-3
Frequency range	0 kHz ... 2 kHz

Electrostatic discharge

Standards/regulations	EN 61000-4-2

Electrostatic discharge

Contact discharge	6 kV (Test Level 3)
Discharge in air	8 kV (Test Level 3)
Comments	Criterion A

Electromagnetic HF field

Standards/regulations	EN 61000-4-3

Electromagnetic HF field

Frequency range	80 MHz ... 1 GHz
Test field strength	10 V/m (Test Level 3)
Frequency range	1 GHz ... 6 GHz
Test field strength	10 V/m (Test Level 3)
Comments	Criterion A

Fast transients (burst)

Standards/regulations	EN 61000-4-4

Fast transients (burst)

Input	4 kV (Test Level 4 - asymmetrical)
Output	2 kV (Test Level 3 - asymmetrical)
Comments	Criterion A

Surge voltage load (surge)

Standards/regulations	EN 61000-4-5

Surge voltage load (surge)

Input	2 kV (Test Level 4 - symmetrical)
	4 kV (Test Level 4 - asymmetrical)
Output	1 kV (Test Level 3 - symmetrical)
	2 kV (Test Level 3 - asymmetrical)
Comments	Criterion A

Conducted interference

Standards/regulations	EN 61000-4-6

Conducted interference

Input/Output	asymmetrical
Frequency range	0.15 MHz ... 80 MHz
Comments	Criterion A
Voltage	10 V (Test Level 3)

Voltage dips

Standards/regulations	EN 61000-4-11
Voltage	230 V AC
Frequency	50 Hz
Voltage dip	70 %
Number of periods	25 periods
Additional text	Class 3
Comments	Criterion A
Voltage dip	40 %
Number of periods	10 periods
Additional text	Class 3
Comments	Criterion A
Voltage dip	0 %
Number of periods	1 period
Additional text	Class 3
Comments	Criterion A

Criteria

Criterion A	Normal operating behavior within the specified limits.
Criterion B	Temporary impairment to operational behavior that is corrected by the device itself.

Drawings

Dimensional drawing

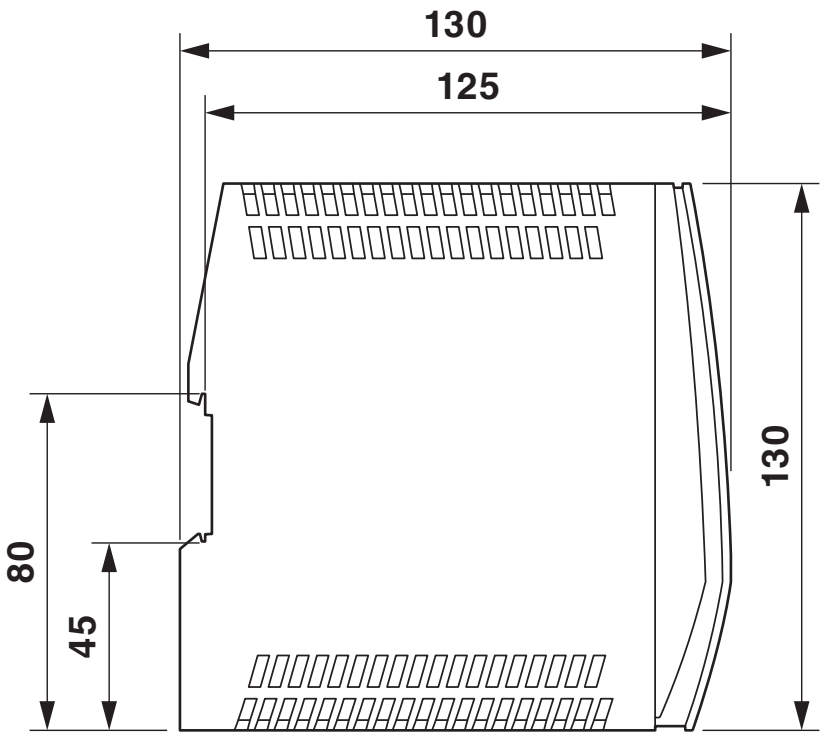

Device dimensions (dimensions in mm)

Diagram

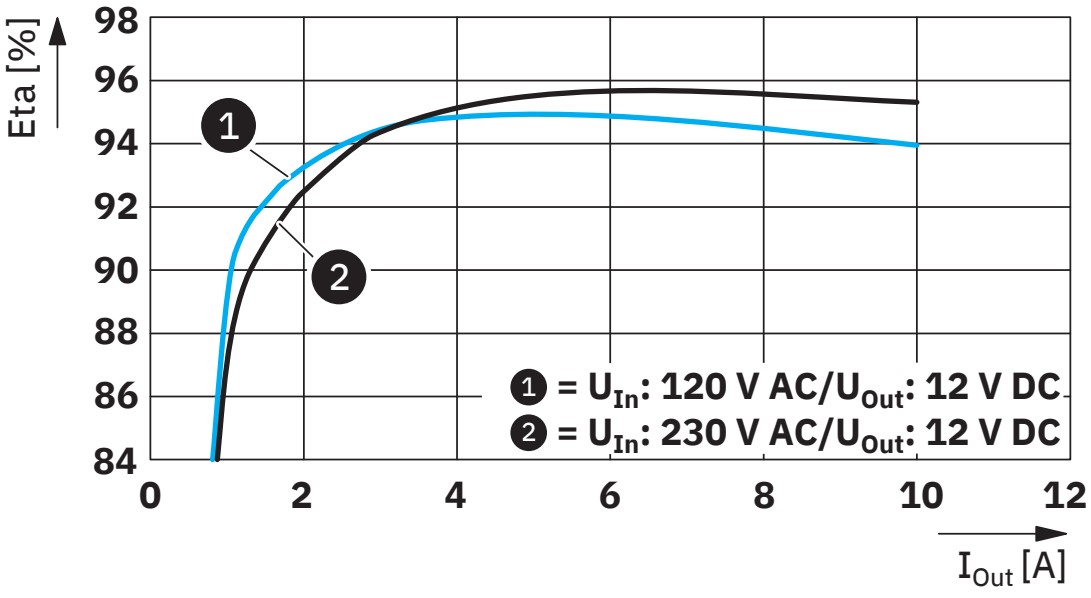

Efficiency

Diagram

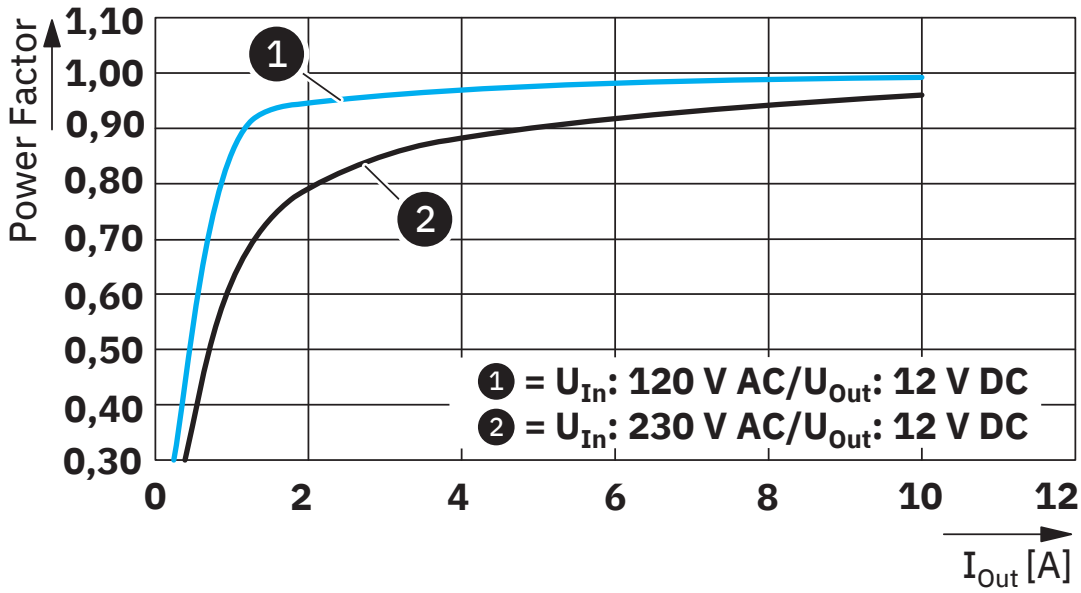

Power factor

Diagram

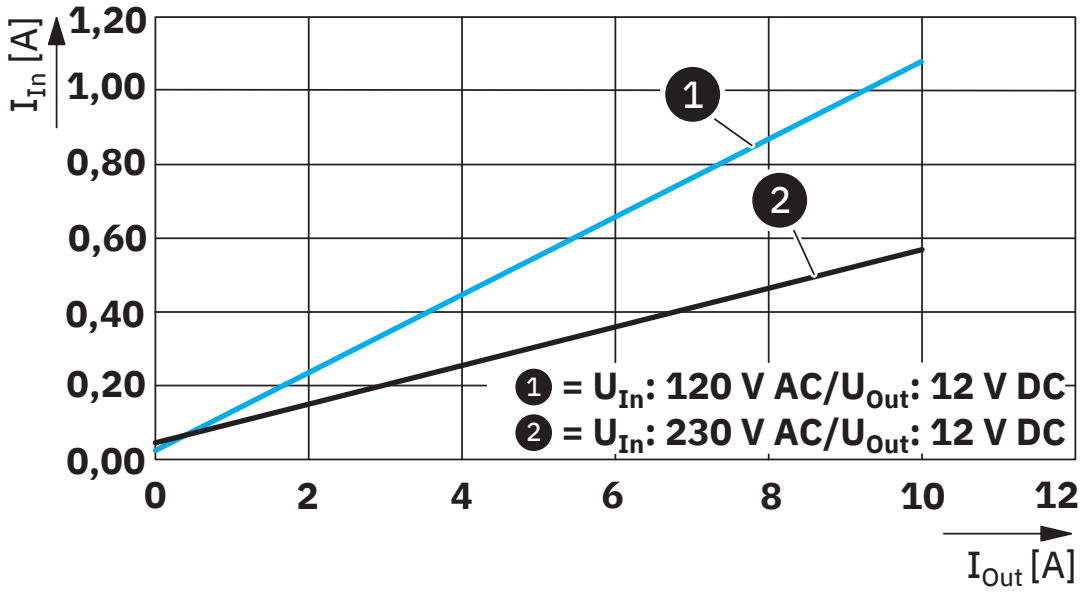

Input current/output current

Diagram

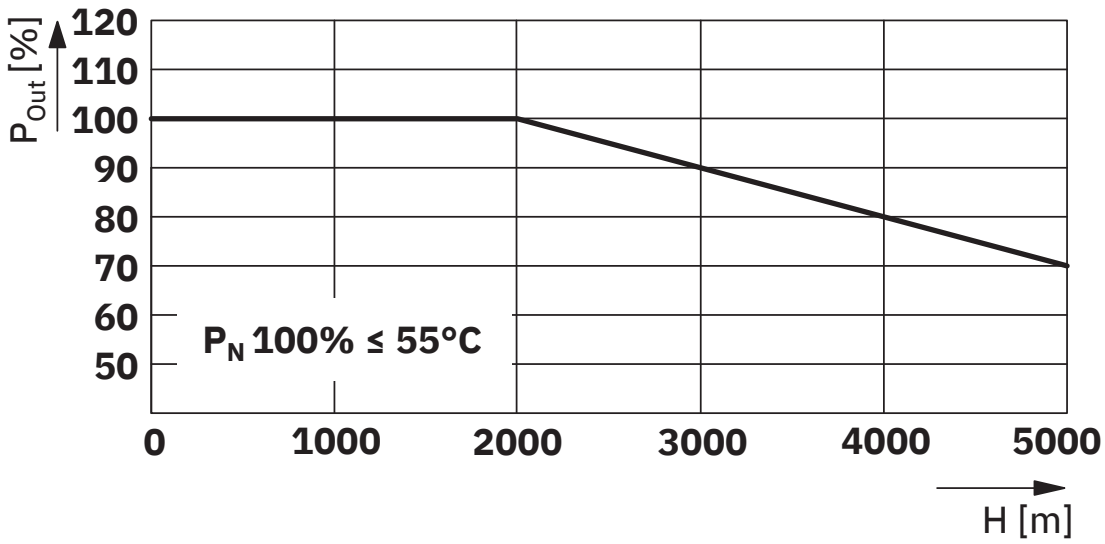

Output power/installation altitude

Block diagram

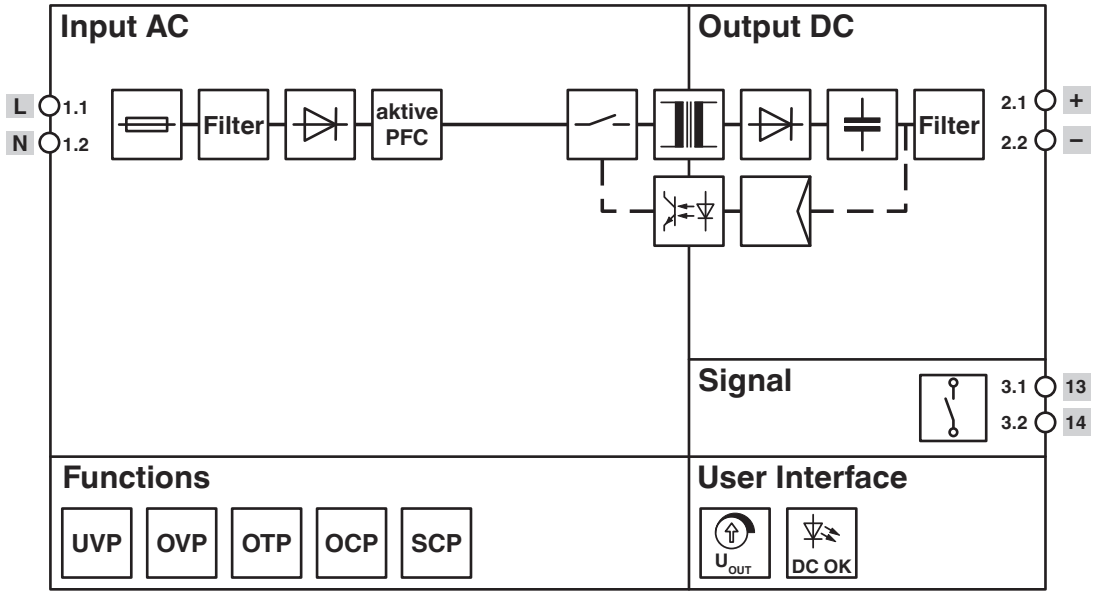

Block diagram

Approvals

To download certificates, visit the product detail page: https://www.phoenixcontact.com/gb/products/1399940

IECEE CB Scheme
Approval ID: SI-12740

cULus Listed
Approval ID: E123528-20241010

IECEE CB Scheme
Approval ID: T223-0818/25

CoC / Compliance Statement
Approval ID: C211-0019/26

cULus Listed
Approval ID: E199827-20241122

Classifications

ECLASS

ECLASS-13.0	27040701
ECLASS-15.0	27040701

ETIM

ETIM 10.0	EC002540

UNSPSC

UNSPSC 21.0	39121000

Environmental product compliance

EU RoHS

Fulfills EU RoHS substance requirements	Yes
Exemption	6(c), 7(c)-I

China RoHS

Environment friendly use period (EFUP)	EFUP-25
	An article-related China RoHS declaration table can be found in the download area for the respective article under "Manufacturer declaration". For all articles with EFUP-E, no China RoHS declaration table issued and required.

EU REACH SVHC

REACH candidate substance (CAS No.)	Lead(CAS: 7439-92-1)
SCIP	6fb4ce0f-08c0-4ce9-b8bb-a442a556714e

EF3.1 Climate Change

CO2e kg	15.08 kg CO2e

Phoenix Contact 2026 © - all rights reserved
https://www.phoenixcontact.com

PHOENIX CONTACT Ltd
Halesfield 13, Telford
Shropshire, TF7 4PG
01952 681700
info@phoenixcontact.co.uk