UPS-BAT/LI/24DC/128WH - Battery module

1396415

https://www.phoenixcontact.com/gb/products/1396415

Please be informed that the data shown in this PDF document is generated from our online catalog. Please find the complete data in the user documentation. Our general terms of use for downloads are valid.

CRA-READY



Battery module (device with battery), Lithium-Ion ($LiFePO_4$), 24 V DC, 128 Wh. For use with a QUINT UPS for ambient temperatures (charging) of 0°C ... 60°C and a maximum charging current of 5 A. For charging below 0°C, please note the permissible UPS V/C level. 2 x 1446073 are required as replacement batteries.. The product is being prepared for compliance with the Cyber Resilience Act (CRA).

Product description

For continuous monitoring and intelligent management, there is constant communication with the QUINT UPS. Thanks to automatic detection of the battery module and tool-free change during operation, quick installation is possible. The battery modules for QUINT UPS with IQ Technology leave the warehouse fully charged.
For ambient temperatures (charging) of -10°C ... 60°C only for QUINT4-UPS/24DC/... from V/C 05,
1067327 QUINT4-UPS/1AC/1AC/500VA/USB from V/C 02,
2320212 QUINT-UPS/24DC/24DC/5 from V/C 12,
2320225 QUINT-UPS/24DC/24DC/10 from V/C 12,
2320238 QUINT-UPS/24DC/24DC/20 from V/C 12,
2320241 QUINT-UPS/24DC/24DC/40 from V/C 13,
2320461 QUINT-UPS/24DC/12DC/5/24DC/10 from V/C 05,
2320270 QUINT-UPS/1AC/1AC/500VA from V/C 06.

ELEKTROGERÄTE RÜCKNAHME

Commercial data

Item number	1396415
Packing unit	1 pc
Minimum order quantity	1 pc

Sales key	CMUEL3
Product key	CMUEL3
GTIN	4063151780043
Weight per piece (including packing)	3,375 g
Weight per piece (excluding packing)	3,053 g
Customs tariff number	85076000
Country of origin	CN

Technical data

Notes

Note on application

Note on application	As things stand now, we are preparing the product so that, as of December 11, 2027, it will comply with the requirements of the EU Cyber Resilience Act (CRA) based on the information currently available regarding the CRA.

General

Note on the battery	This product contains a battery with a limited shelf life that must be charged every few months. The product packaging indicates when the battery must be started up or recharged. The general shelf life can be found in the energy storage devices area under “Latest startup”.

Energy storage

Input

Input voltage	24 V DC
Nominal capacity	128 Wh (2x 64 Wh)
	5 Ah
Charging current	10 A
End-of-charge voltage	28.4 V DC (20 °C)

Output

Output current	45 A
Output fuse	2x 25 A ATOF Blade Fuse
Buffer time	14 min (20 A)

General

Connection in parallel	yes
	max. 5
Battery type	Grepow, 2x 25.6 V GRP6053117-8S1P-A
Battery technology	Lithium-Ion ($LiFePO_4$)
IQ-Technology	yes
Latest startup date (battery only)	6 Months (-20 °C ... 35 °C)
	1 Months (-30 °C ... 65 °C)
Service life	10 Years (20 °C)
Size designation	Block
Temperature sensor	yes

Connection data

Battery

Position	4.x

Connection technology

Position marking	4.1 (+), 4.2 (-)

Conductor connection

Connection method	Screw connection
rigid	0.75 mm² ... 16 mm²
	10 mm² ... 16 mm²
flexible	0.75 mm² ... 16 mm²
	10 mm² ... 16 mm²
flexible with ferrule without plastic sleeve	10 mm² ... 16 mm² (recommended)
	0.75 mm² ... 16 mm²
flexible with ferrule with plastic sleeve	10 mm² ... 16 mm² (recommended)
	0.75 mm² ... 16 mm²
AWG	20 ... 6
	8 ... 6 (recommended)
Stripping length	10 mm (recommended)
	10 mm
Tightening torque	1.2 Nm ... 1.5 Nm
	15 lb_f-in.
Drive form screw head	Slotted L

LIN

Position	4.x

Connection technology

Position marking	4.3 (⎍⎍)

Conductor connection

Connection method	Screw connection
rigid	0.75 mm² ... 16 mm² (LIN)
flexible	0.75 mm² ... 16 mm² (LIN)
flexible with ferrule without plastic sleeve	0.75 mm² ... 16 mm² (LIN)
flexible with ferrule with plastic sleeve	0.75 mm² ... 16 mm² (LIN)
AWG	20 ... 6
Stripping length	10 mm (LIN)

Product properties

Product type	Battery module
Product family	Battery module (device with battery)
Application	for QUINT4-UPS
Disposal	Used batteries must not be thrown away with household waste, they should instead be disposed of in accordance with applicable national regulations.
Special properties	The product is being prepared for compliance with the Cyber Resilience Act (CRA)

Insulation characteristics

Protection class	III

Degree of pollution	2

Dimensions

Item dimensions

Width	135 mm
Height	202 mm
Depth	110 mm

Drill hole

Diameter	5 mm

Installation dimensions

Installation distance right/left	0 mm / 0 mm
Installation distance top/bottom	5 mm / 5 mm

Environmental and real-life conditions

Ambient conditions

Degree of protection	IP20
Ambient temperature (storage/transport)	-30 °C ... 65 °C
	-20 °C ... 35 °C (recommended)
Ambient temperature (charge)	-10 °C ... 55 °C (0 °C ... 55 °C, UPS V/C Level)
Ambient temperature (discharge)	-20 °C ... 60 °C
Max. permissible relative humidity (operation)	≤ 95 %
Shock	30g, 18 ms per spatial direction (in accordance with IEC 60068-2-27)
Vibration (operation)	5 Hz … 100 Hz, 0.7g (in accordance with DNV / IEC 60068-2-6)

Approvals

UL

Identification	UL/C-UL Listed UL 61010-1

UL

Identification	UL/C-UL Listed ANSI/UL 121201 Class I, Division 2, Groups A, B, C, D (Hazardous Location)

Ex data

Suited for EX-applications	no

Drawings

Block diagram

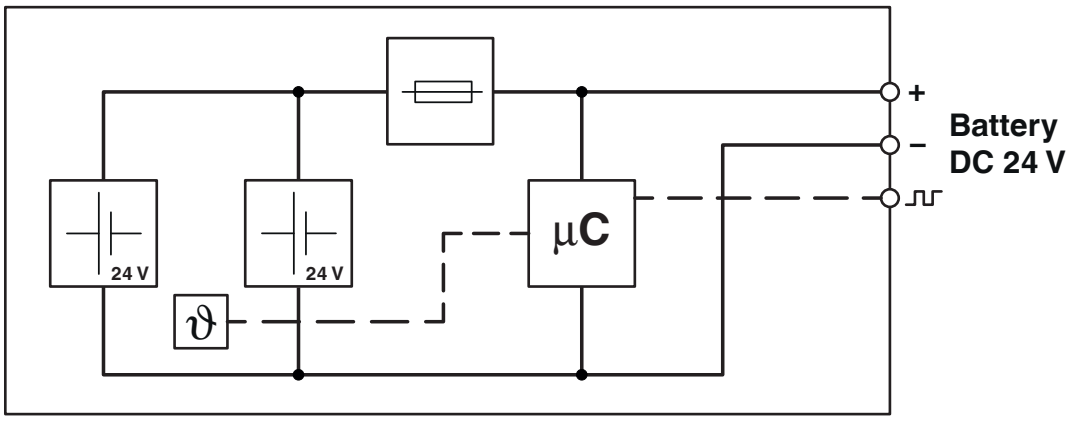

Block diagram

Graphic

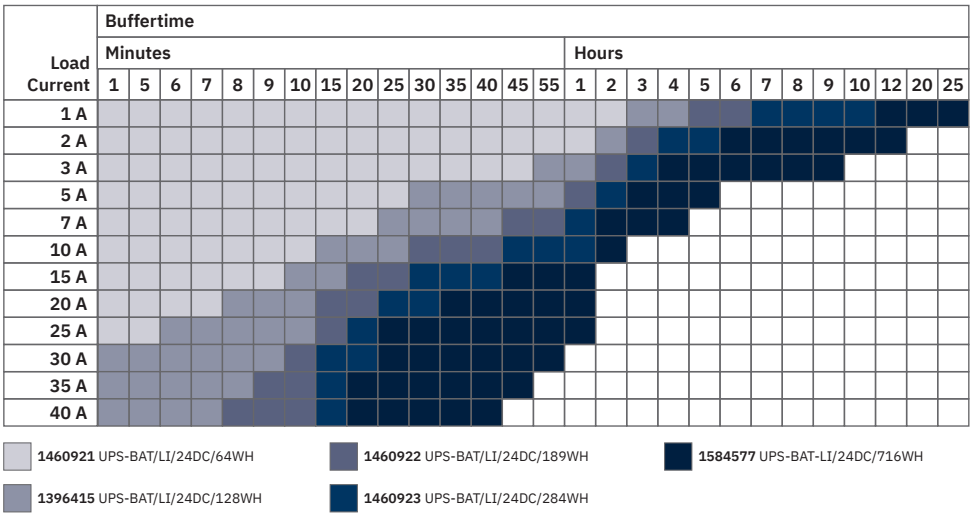

Lithium battery buffer times for QUINT DC UPS

Approvals

To download certificates, visit the product detail page: https://www.phoenixcontact.com/gb/products/1396415

cULus Listed
Approval ID: FILE E 123528

IECEE CB Scheme
Approval ID: DK-134807-A1-UL

DNV
Approval ID: TAA0000265

	Nominal voltage U_N	Nominal current I_N	Cross section AWG	Cross section mm^2
keine				
	500 V	41 A	-	- 6

cULus Listed
Approval ID: FILE E 199827

Classifications

ECLASS

ECLASS-13.0	27050403
ECLASS-15.0	27050403

ETIM

ETIM 10.0	EC003893

UNSPSC

UNSPSC 21.0	26111700

Environmental product compliance

EU RoHS

Fulfills EU RoHS substance requirements	Yes
Exemption	7(c)-I

China RoHS

Environment friendly use period (EFUP)	EFUP-25
	An article-related China RoHS declaration table can be found in the download area for the respective article under "Manufacturer declaration". For all articles with EFUP-E, no China RoHS declaration table issued and required.

EU REACH SVHC

REACH candidate substance (CAS No.)	Lead(CAS: 7439-92-1)

EF3.1 Climate Change

CO2e kg	78.6 kg CO2e

Phoenix Contact 2026 © - all rights reserved
https://www.phoenixcontact.com

PHOENIX CONTACT Ltd
Halesfield 13, Telford
Shropshire, TF7 4PG
01952 681700
info@phoenixcontact.co.uk