# PTCB E1 24DC/1-8A NO2 - Electronic circuit breaker

1388391

https://www.phoenixcontact.com/gb/products/1388391

Please be informed that the data shown in this PDF document is generated from our online catalog. Please find the complete data in the user documentation. Our general terms of use for downloads are valid.

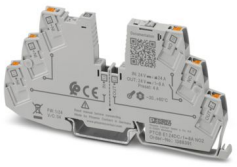

1-channel, electronic circuit breaker for protecting loads at 24 V DC against overload and short circuit. Easy potential distribution with components from the CLIPLINE complete terminal block system. With electronic interlock of the set nominal currents. The signal contact opens if the channel has been switched off manually or due to a fault. For installation on DIN rails.

## Your advantages

- Simple application setup due to bridging option to CLIPLINE complete terminal block system
- More space in the control cabinet: narrowest protection on just 6 mm width
- Flexible use and reduction of inventory due to adjustable amp values on each device for wide range of applications
- Individual setup for suitable protection, exactly according to your requirements

ELEKTROGERÄTE RÜCKNAHME

## Commercial data

| | |
|---|---|
| Item number | 1388391 |
| Packing unit | 1 pc |
| Minimum order quantity | 1 pc |
| Sales key | CLA135 |
| Product key | CLA135 |
| GTIN | 4063151766757 |
| Weight per piece (including packing) | 34 g |
| Weight per piece (excluding packing) | 34.4 g |
| Customs tariff number | 85363010 |
| Country of origin | DE |

# Technical data

## Notes

General

| | |
|---|---|
| Note | EN 50121-3-2: Railway applications - Electromagnetic compatibility - Part 3-2: Rolling stock – Apparatus |
| | Connection for signal line tested in accordance with EN 61000-4-4 with 1 kV; if necessary, customer must provide appropriate protective measures |
| | Repeated hard short circuits can reduce the melting integral of the integrated backup fuse. |
| | Always connect the negative pole to terminal IN- to ensure the internal power supply. Return currents from the loads must not be fed back to the power supply via IN- of the circuit breaker. |

## Product properties

| | |
|---|---|
| Product type | Device circuit breakers |
| Product family | PTCB |
| Type | DIN rail module, one-piece |
| Number of positions | 1 |

Insulation characteristics

| | |
|---|---|
| Protection class | III |
| Pollution degree | 2 |

## Electrical properties

General

| | |
|---|---|
| Operating voltage | 18 V DC ... 30 V DC |
| Rated voltage | 24 V DC |
| Rated current $I_N$ | 24 A (Total current input) |
| | 8 A (Rated current output) |
| Rated current $I_N$ | 1 / 2 / 3 / 4 / 5 / 6 / 7 / 8 A DC (adjustable) |
| Rated current (pre-adjusted) | 4 A |
| Rated surge voltage | 0.5 kV |
| Tripping method | E (electronic) |
| Feedback resistance | max. 35 V DC |
| Required backup fuse | Only required if $I_{max}$ of the power supply > the short-circuit switching capacity. Integrated failsafe element. |
| Short-circuit switching capacity | 300 A |
| Dielectric strength | max. 35 V DC (Load circuit) |
| Fuse | electronic |
| Efficiency | > 99 % |
| Closed circuit current $I_0$ | typ. 12 mA |
| Power dissipation | typ. 0.3 W (No-load operation) |
| | < 1.6 W (Nominal operation) |

| | |
|---|---|
| Module initialization time | < 0.55 s |
| Waiting time after switch off of a channel | 5 s (at overload / short circuit) |
| Measuring tolerance I | ± 15 % |
| Temperature derating | 21 A (Total current at 60°C) |
| | 24 A (Total current at 50°C) |
| | 7 A (Channel current at 60°C) |
| | 8 A (Channel current at 50°C) |
| MTBF (IEC 61709, SN 29500) | 25641025 h (at 25 °C with 21 % load) |
| | 10989010 h (at 40°C with 34.25% load) |
| | 1149425 h (at 55°C with 100% load) |
| Voltage drop | 0.13 V (at 8 A) |
| Fail-safe element | 15 A DC |
| Contact switching type | without electrical isolation |

Load circuit

| | |
|---|---|
| Shutdown time | ≤ 10 ms (for short circuit > 2.0 x $I_N$) |
| | 1 s (1.2 ... 2.0 x $I_N$) |
| Undervoltage switch-off | ≤ 17.8 V DC (active) |
| | ≥ 18.8 V DC (inactive) |
| Overvoltage switch-off | ≥ 30.5 V DC (active) |
| | ≤ 29.5 V DC (inactive) |
| Max. capacitive load | 25000 µF (Depending on the current setting and the short-circuit current available) |

Indicator/remote signaling

| | |
|---|---|
| Connection name | Remote indication circuit |
| Switching function | N/O contact |
| Operating voltage | 0 V DC ... 30 V DC |
| Operating current | 100 mA DC |

## Connection data

Main circuit IN+

| | |
|---|---|
| Connection method | Push-in connection |
| Stripping length | 8 mm |
| Conductor cross-section flexible | 0.2 mm² ... 2.5 mm² |
| Conductor cross-section rigid | 0.2 mm² ... 4 mm² |
| Conductor cross-section AWG | 24 ... 12 |
| Conductor cross-section, flexible, with ferrule, with plastic sleeve | 0.2 mm² ... 2.5 mm² |
| Conductor cross-section, flexible, with ferrule, without plastic sleeve | 0.2 mm² ... 2.5 mm² |

Main circuit IN-

| | |
|---|---|
| Connection method | Push-in connection |
| Stripping length | 8 mm |
| Conductor cross-section flexible | 0.2 mm² ... 2.5 mm² |

| | |
|---|---|
| Conductor cross-section rigid | 0.2 mm² ... 4 mm² |
| Conductor cross-section AWG | 24 ... 12 |
| Conductor cross-section, flexible, with ferrule, with plastic sleeve | 0.2 mm² ... 2.5 mm² |
| Conductor cross-section, flexible, with ferrule, without plastic sleeve | 0.2 mm² ... 2.5 mm² |

Main circuit OUT

| | |
|---|---|
| Connection method | Push-in connection |
| Stripping length | 8 mm |
| Conductor cross-section flexible | 0.2 mm² ... 2.5 mm² |
| Conductor cross-section rigid | 0.2 mm² ... 4 mm² |
| Conductor cross-section AWG | 24 ... 12 |
| Conductor cross-section, flexible, with ferrule, with plastic sleeve | 0.2 mm² ... 2.5 mm² |
| Conductor cross-section, flexible, with ferrule, without plastic sleeve | 0.2 mm² ... 2.5 mm² |

Remote indication circuit

| | |
|---|---|
| Connection method | Push-in connection |
| Stripping length | 8 mm |
| Conductor cross-section flexible | 0.2 mm² ... 2.5 mm² |
| Conductor cross-section rigid | 0.2 mm² ... 4 mm² |
| Conductor cross-section AWG | 24 ... 14 |
| Conductor cross-section, flexible, with ferrule, with plastic sleeve | 0.2 mm² ... 2.5 mm² |
| Conductor cross-section, flexible, with ferrule, without plastic sleeve | 0.2 mm² ... 2.5 mm² |

## Signaling

| | |
|---|---|
| Channel LED off | off (Channel switched off) |
| Channel LED yellow | lit (Channel switched on, channel load > 80% ) |
| | flashing (Programming mode active) |
| Channel LED green | lit (Channel switched on) |
| Channel LED red | lit (Channel switched off, over- or undervoltage active) |
| | ON temporarily (Channel switched off, 5 s cool-down phase, overload or short-circuit release) |
| | flashing (Channel switched off, ready to be switched back on, overload or short-circuit release) |
| | flashing quickly (Channel switched off, external voltage at the output, possible installation error) |

## Dimensions

| | |
|---|---|
| Dimensional drawing | 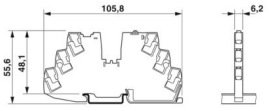  |
| Width | 6.2 mm |
| Height | 105.8 mm |

| | |
|---|---|
| Depth | 55.6 mm (incl. DIN rail 7.5 mm) |

## Material specifications

| | |
|---|---|
| Color | gray (RAL 7042) |
| Material | PBT |
| | PBT |
| Flammability rating according to UL 94 | V-0 |

## Environmental and real-life conditions

### Ambient conditions

| | |
|---|---|
| Degree of protection | IP20 |
| Ambient temperature (operation) | -30 °C ... 60 °C |
| Ambient temperature (storage/transport) | -40 °C ... 70 °C |
| Altitude | ≤ 3000 m up to 52 °C (amsl) |
| | ≤ 4000 m up to 46 °C (amsl) |
| Humidity test | 96 h, 95 % RH, 40 °C |
| Shock (operation) | 30g (IEC 60068-2-27, Test Ea) |
| Vibration (operation) | 10 Hz ... 59.6 Hz (Amplitude ±0.35 mm; in accordance with IEC 60068-2-6, Test Fc) |
| | 59.6 Hz ... 150 Hz (Acceleration 5g; in accordance with IEC 60068-2-6, Test Fc) |
| | 5 Hz ... 100 Hz (Resonance search 4g; resonance frequency 4g; 90 min in accordance with DNV GL Class B) |

## Approvals

### UL approval

| | |
|---|---|
| Identification | UL/C-UL Listed UL 508 |
| | UL Recognized UL 2367 |
| | UL/C-UL Listed ANSI/UL 121201 Class I, Division 2, Groups A, B, C, D; T4 (Hazardous Location) |

### DNV GL

| | |
|---|---|
| Identification | Shipbuilding approval |

### Corrosive gas test

| | |
|---|---|
| Identification | ISA S71.04.2013 G3 Harsh Group A |

### Shipbuilding data

| | |
|---|---|
| Temperature | A |
| Humidity | B |
| Vibration | B |
| EMC | B |
| Enclosure | A |

## Standards and regulations

| | |
|---|---|
| Standards/specifications | EN 61000-6-2 |

| | |
|---|---|
| Note | EMC – Immunity for industrial areas |
| Standards/specifications | EN 61000-6-3 |
| Note | EMC – Emission for residential, business and commercial properties and small operations |
| Standards/specifications | EN 60068-2-78 |
| Note | Environmental influences – Moisture and heat, constant |
| Standards/specifications | EN 50178 |
| Note | Equipping power installations with electronic equipment |
| Standards/specifications | EN 60068-2-6 |
| Note | Environmental influences – Vibrations (sinusoidal) |
| Standards/specifications | EN 60068-2-27 |
| Note | Environmental influences – Shocks |
| Standards/specifications | EN 60068-2-30 |
| Note | Environmental influences – Part 2–30: Tests – Test Db: Damp heat, cyclical |
| Standards/specifications | EN 61373 |
| Note | Railway applications - Rolling stock equipment - Shock and vibration tests |
| Standards/specifications | EN 45545-2 |
| Note | Railway applications - Fire protection on railway vehicles - Part 2: Requirements for fire behavior of materials and components |

## Mounting

| | |
|---|---|
| Mounting type | DIN rail: 35 mm |

## Drawings

Dimensional drawing

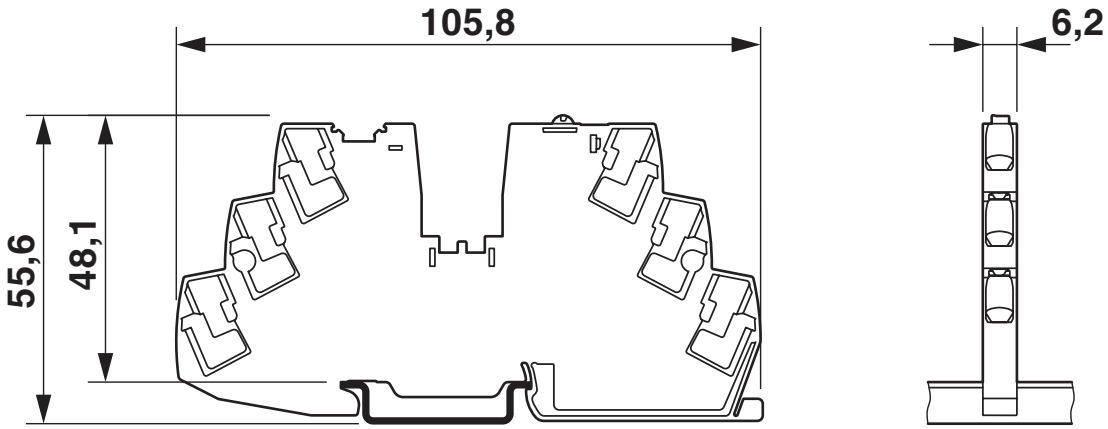

## Product drawing

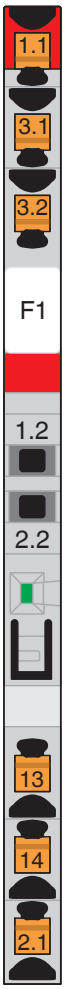


## Application drawing

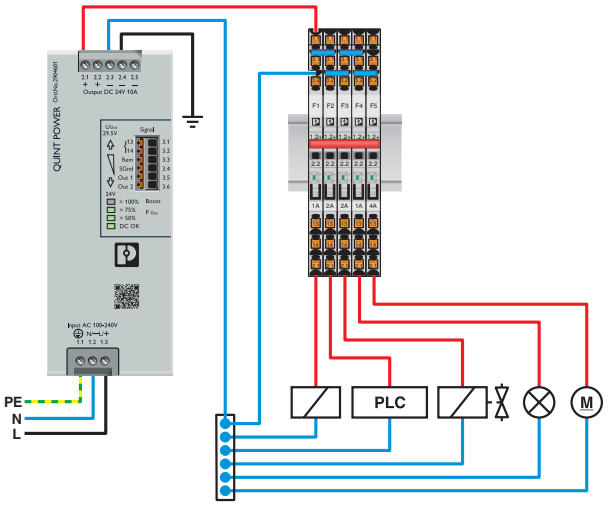

Application drawing

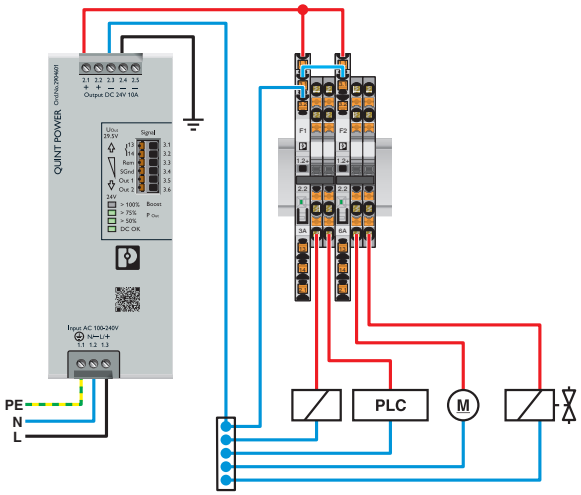


Diagram

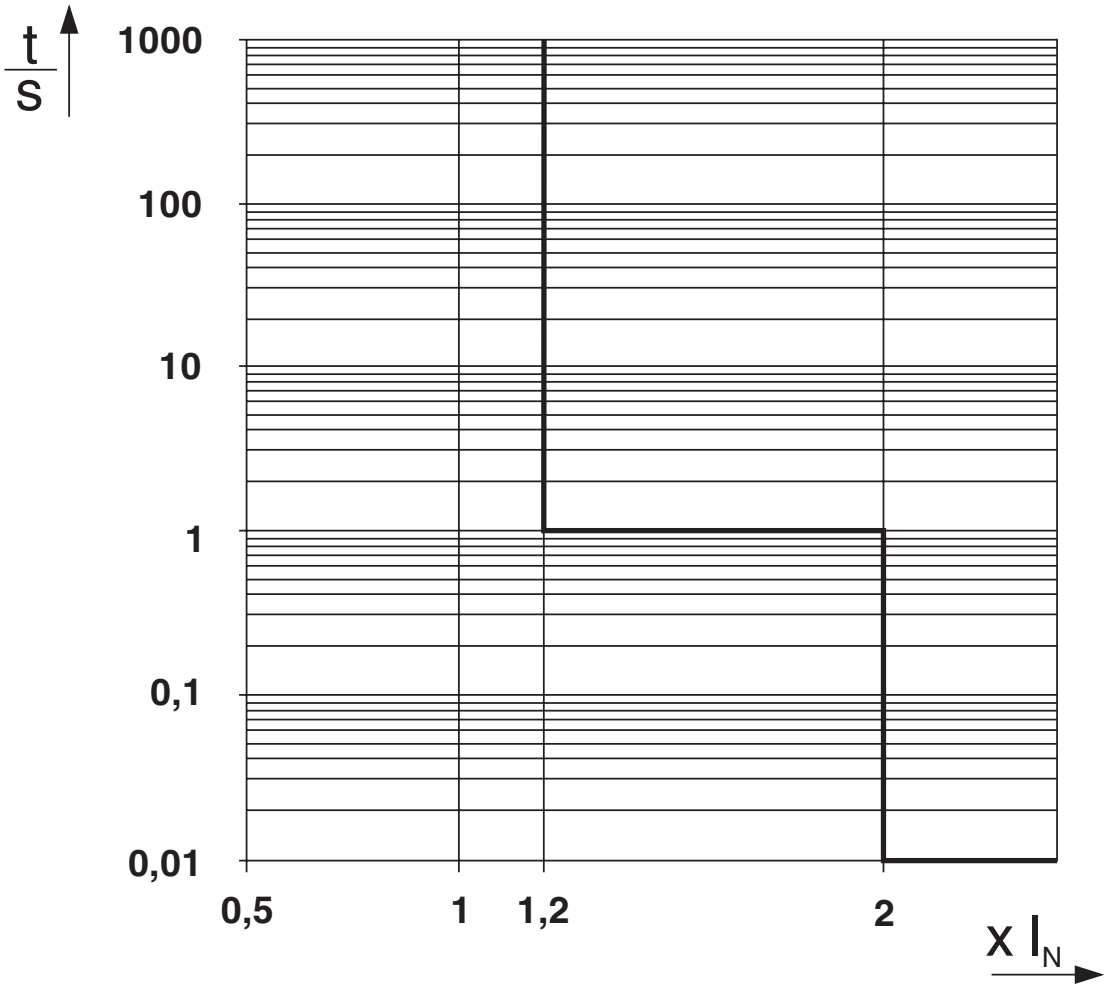


Trigger characteristic in the DC range

Diagram

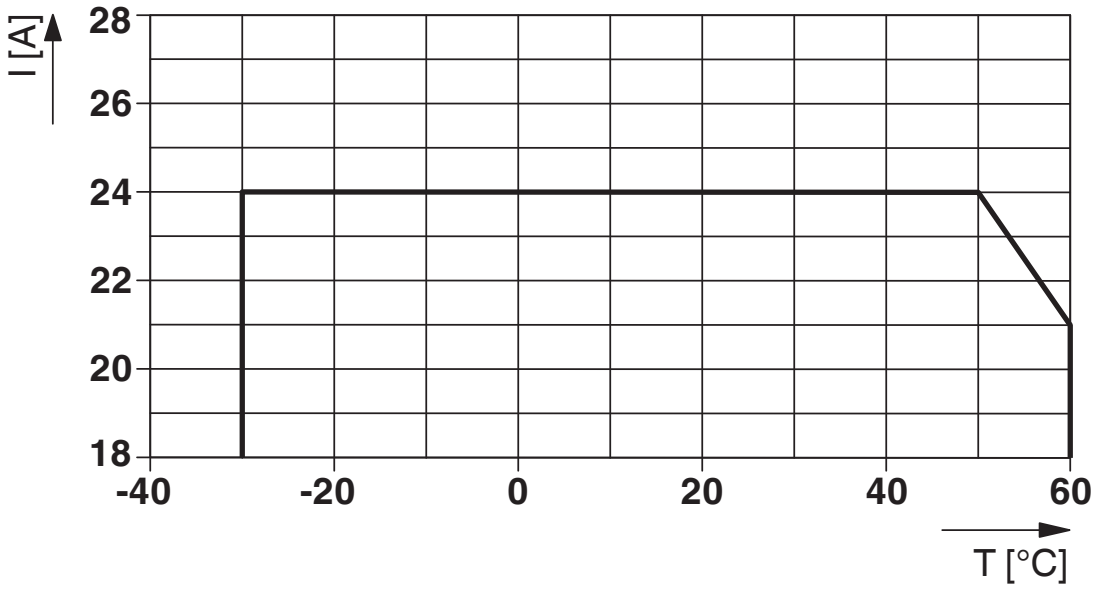


Total current input

Diagram

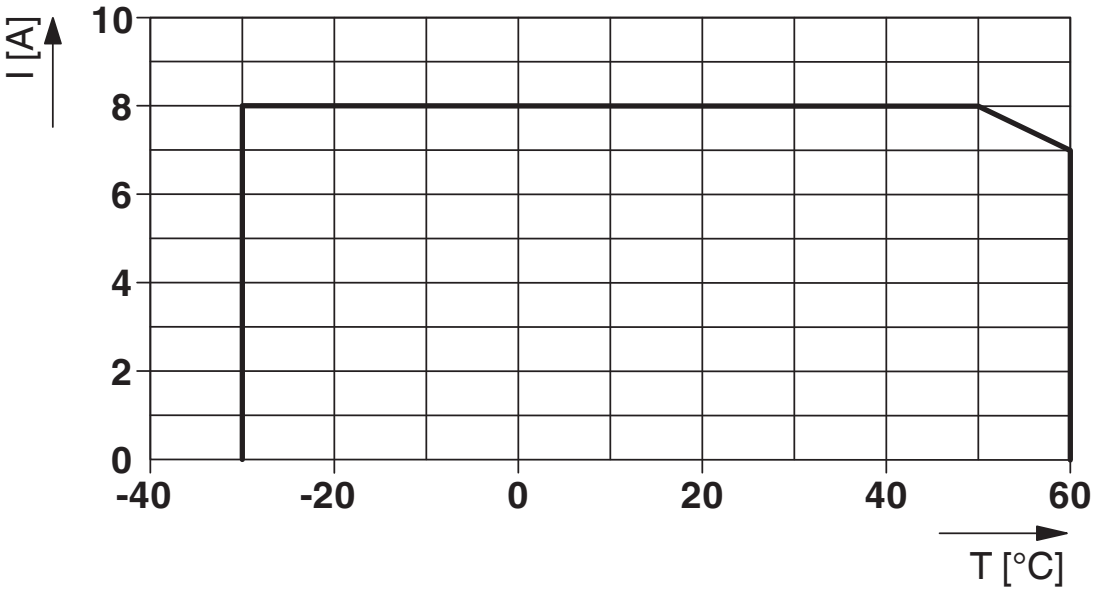


Channel current output

Block diagram

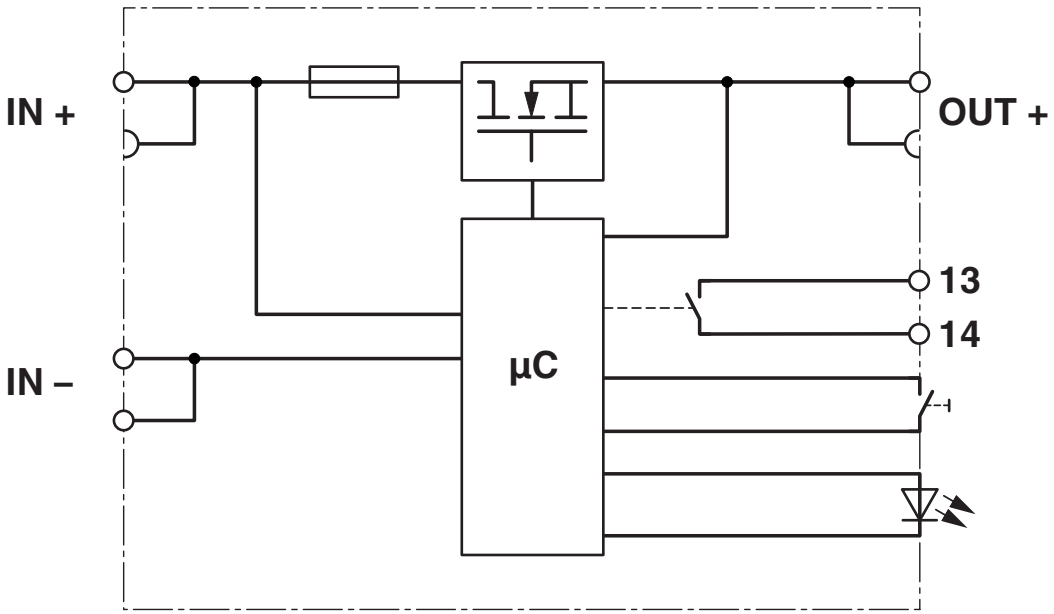

## Approvals

To download certificates, visit the product detail page: https://www.phoenixcontact.com/gb/products/1388391

**UL Recognized**
Approval ID: E317172-20170817

**UL Listed**
Approval ID: E123528-20170530

**cUL Listed**
Approval ID: E123528-20170530

**DNV GL**
Approval ID: TAE00003UT

**UL Recognized**
Approval ID: E324415-20201030

**cUL Listed**
Approval ID: E483407-20201030

**UL Listed**
Approval ID: E483407-20201030

## Classifications

### ECLASS

| | |
|---|---|
| ECLASS-13.0 | 27140401 |
| ECLASS-15.0 | 27140401 |

### ETIM

| | |
|---|---|
| ETIM 10.0 | EC003538 |

### UNSPSC

| | |
|---|---|
| UNSPSC 21.0 | 39121400 |

## Environmental product compliance

EU RoHS

| | |
|---|---|
| Fulfills EU RoHS substance requirements | Yes |
| Exemption | 7(a), 7(c)-I |

China RoHS

| | |
|---|---|
| Environment friendly use period (EFUP) | EFUP-50 |
| | An article-related China RoHS declaration table can be found in the download area for the respective article under "Manufacturer declaration". For all articles with EFUP-E, no China RoHS declaration table issued and required. |

EU REACH SVHC

| | |
|---|---|
| REACH candidate substance (CAS No.) | Lead(CAS: 7439-92-1) |
| SCIP | b6ae79a3-ecaa-4995-bb7d-c0577aefd9eb |

EF3.1 Climate Change

| | |
|---|---|
| CO2e kg | 1.521 kg CO2e |

Phoenix Contact 2026 © - all rights reserved
https://www.phoenixcontact.com

PHOENIX CONTACT Ltd
Halesfield 13, Telford
Shropshire, TF7 4PG
01952 681700
info@phoenixcontact.co.uk