CATAN DALI MM4 DOI8 - Data interface

1371363

https://www.phoenixcontact.com/gb/products/1371363

Please be informed that the data shown in this PDF document is generated from our online catalog. Please find the complete data in the user documentation. Our general terms of use for downloads are valid.

CRA-READY



Extension module for Catan controller.
Currently only used in conjunction with Catan C1 EN and Emalytics/Niagara, use via Symcon app is in preparation.
4 DALI lines, DALI-2, multi-master, integrated DALI power supply unit, 8 DOIs. Local override operation via Catan Control Panel. Connection to the Catan controller via Single Pair Ethernet.

Product description

The DALI extension module supplements the Catan product family with a powerful lighting control system for 4 independent DALI lines. It supports the DALI-2 standard including multi-master function for integrating DALI sensors. It has an integrated bus power supply. The DiiA certification guarantees compatibility with all certified DALI products. It also offers 8 digital outputs, which can alternatively be used for the digital input or counter function. The device is Cradle to Cradle Certified® at bronze level.

Your advantages

- Space and cost savings thanks to highly flexible I/O configurability
- Integration of a large number of DALI devices (max. 256 ballasts and 252 sensors)
- Startup and maintenance with plug-in display for local operation
- High-performance extension bus also enables distributed installation

full scope CERTIFIED cradle to cradle bronze version 4.0 C2CCERTIFIED.ORG

Commercial data

Item number	1371363
Packing unit	1 pc

Minimum order quantity	1 pc
Sales key	DRHAFA
Product key	DRHAFA
GTIN	4063151727895
Weight per piece (including packing)	236 g
Weight per piece (excluding packing)	214 g
Country of origin	Information on the country of origin is provided with the delivery.

Technical data

Dimensions

Dimensions without display connected

Width	89.7 mm
Height	60.7 mm
Length	107.6 mm
Horizontal pitch	6 HP (DIN rail housing in accordance with DIN 43871)

Dimensions with display connected

Width	89.7 mm
Height	68 mm
Length	107.6 mm

Notes

Note on application	The DALI module can currently only be used in conjunction with CATAN C1 EN and Emalytics/Niagara; use with the Symcon app is in preparation.
Note on application	Only for industrial use
Note on application	As things stand now, we are preparing the product so that, as of December 11, 2027, it will comply with the requirements of the EU Cyber Resilience Act (CRA) based on the information currently available regarding the CRA.

Mounting

Mounting type	DIN rail mounting (in accordance with DIN EN 60715)
Mounting position	horizontal

Material specifications

Color (Lower housing part)	gray (RAL 7042)
Color (Upper housing part)	light gray (RAL 7035)
Material (Housing)	Polycarbonate
Flammability rating according to UL 94	V0

Interfaces

DALI-2

Number of interfaces	4
Connection method	Push-in connection

Fieldbus: DALI

Designation	DALI
No. of channels	4
Supply voltage	typ. 16 V DC (Bus voltage)
Output current	220 mA (guaranteed)
	250 mA (maximum)

Current carrying capacity	max. 180 mA (per channel)
Transmission speed	1200 bps
Type of protection	Bus protected up to 250 V AC, maximum

Extension bus (link bus)

Number of interfaces	2 (for extension modules)
Connection method	Push-in connection
Note on the connection method	Single Pair Ethernet (SPE) 10BASE-T1L, shielded
Transmission speed	10 Mbps
Transmission length	max. 350 m (between two devices)

Connection for Catan Control Panel

Number of interfaces	1
Connection method	USB 2.0 full speed, socket type C
Transmission speed	max. 12 Mbps

Input data

Digital: Digital input (DOI)

Input name	“Digital input” function
Input information	Connect the contact to ground.
	Recommendation: If you use sensitive contacts such as reed contacts, connect a series resistor of at least 100 Ω in series.
Connection method	Push-in connection
Connection technology	2-conductor
Input current (Contact)	1 mA
Input resistance range (“0” signal)	> 27 kΩ
Input resistance range (“1” signal)	< 1 kΩ

Counter: Digital input (DOI)

Input name	Counter inputs
Input frequency	max. 100 Hz
Resolution	1 Impulse

Output data

Digital: Digital output (DOI)

Output name	Digital outputs with “Digital input” function (DOI)
Note on output	To obtain a valid voltage level for a logical “0” signal at the output, use a load resistor < 3 kΩ.
	You can parameterize each digital output for the “Digital input” function.
Connection method	Push-in connection
Connection technology	2-conductor
Number of outputs	8
Protective circuit	Short-circuit protection
	Overload protection

	Protection against incorrect DC connection (max. 30 V)
Output current	max. 500 mA
	Observe derating! Sum of the output currents up to 45°C: 4 A, derating up to 50°C: reduction by 0.2 A per Kelvin
Nominal output voltage	24 V DC
Output current when switched off	max. 1.4 mA
Nominal load, ohmic	12 W (48 Ω)
Behavior with overload	Auto restart
Behavior at voltage switch-off	The output follows the power supply without delay
Permissible cable length	max. 30 m (For compliance with the requirements in accordance with CE and to ensure compliance with the EMC Directive)
Reverse voltage resistance to short pulses	Reverse voltage proof

Product properties

Product type	I/O component
Product family	Catan
Installation location	indoor use
Mounting position	horizontal
	Alternative mounting positions are possible, but can lead to a reduction in thermal performance.
Special properties	The product is being prepared for compliance with the Cyber Resilience Act (CRA)
	Multi-master-capable

Insulation characteristics

Overvoltage category	II (IEC 60664-1, EN 60664-1)
Pollution degree	2 (IEC 60664-1, EN 60664-1)

Electrical properties

Supply:

Designation	Supply
Supply voltage	24 V DC
Supply voltage range	19.2 V DC ... 30 V DC (including all tolerances, including ripple)
Current consumption	max. 5.1 A
	Please refer to the “Additional data” section in the data sheet.

Electrical isolation/isolation of the voltage ranges

Test voltage: Extension bus/communications	500 V AC, 50 Hz, 1 min
Test voltage: Logic/functional ground	500 V AC, 50 Hz, 1 min
Test voltage: DALI 1 / DALI 2 / DALI 3 / DALI 4	500 V AC, 50 Hz, 1 min
Test voltage: DALI/logic	1.5 kV AC, 50 Hz, 1 min
Test voltage: DALI/functional ground	1.5 kV AC, 50 Hz, 1 min
Test voltage: DALI/extension bus	1.5 kV AC, 50 Hz, 1 min

Connection data

Connection technology

Connection name	Connections 1 ... 19 (DALI)

Connections 1 ... 19 (DALI)

Connection method	Push-in connection
Conductor cross-section, rigid	0.2 mm² ... 4 mm² (Conductor connection with open terminal point)
	0.5 mm² ... 4 mm² (Push-in connection)
Conductor cross-section, flexible	0.2 mm² ... 4 mm²
Conductor cross-section AWG	24 ... 12
Conductor cross-section, flexible, with ferrule, with plastic sleeve	0.25 mm² ... 2.5 mm²
Conductor cross-section, flexible, with ferrule, without plastic sleeve	0.25 mm² ... 2.5 mm²
	0.25 mm² ... 2.5 mm²
Conductor cross-section, flexible, with ferrule, with plastic sleeve	0.25 mm² ... 2.5 mm²
Nominal cross section	4 mm²
Stripping length	10 mm

Connections 31 ... 62 (power supply, link bus, digital outputs)

Connection method	Push-in connection
Conductor cross-section, rigid	0.2 mm² ... 1.5 mm² (Conductor connection with open terminal point)
	0.34 mm² ... 1.5 mm² (Push-in connection)
Conductor cross-section, flexible	0.5 mm² ... 1.5 mm²
Conductor cross-section AWG	24 ... 16
Conductor cross-section, flexible, with ferrule, with plastic sleeve	0.25 mm² ... 1.5 mm²
Conductor cross-section, flexible, with ferrule, without plastic sleeve	0.25 mm² ... 1.5 mm²
	0.25 mm² ... 1.5 mm²
Conductor cross-section, flexible, with ferrule, with plastic sleeve	0.25 mm² ... 1.5 mm²
Nominal cross section	1.5 mm²
Stripping length	10 mm

Environmental and real-life conditions

Ambient conditions

Ambient temperature (operation)	-5 °C ... 50 °C (up to 3000 m above mean sea level)
Degree of protection	IP20
Air pressure (operation)	70 kPa ... 106 kPa (up to 3000 m above mean sea level)
Air pressure (storage/transport)	58 kPa ... 106 kPa (up to 4500 m above mean sea level)
Ambient temperature (storage/transport)	-40 °C ... 85 °C
Permissible humidity (operation)	5 % ... 95 % (non-condensing)
Permissible humidity (storage/transport)	5 % ... 95 % (non-condensing)

Mechanical test

Vibration resistance in accordance with EN 60068-2-6/IEC 60068-2-6	5g
Shock in accordance with EN 60068-2-27/IEC 60068-2-27	30g

Continuous shock in accordance with EN 60068-2-27/IEC 60068-2-27	10g

Standards and regulations

Protection class	III (IEC 61140, EN 61140, VDE 0140-1)

Drawings

Dimensional drawing

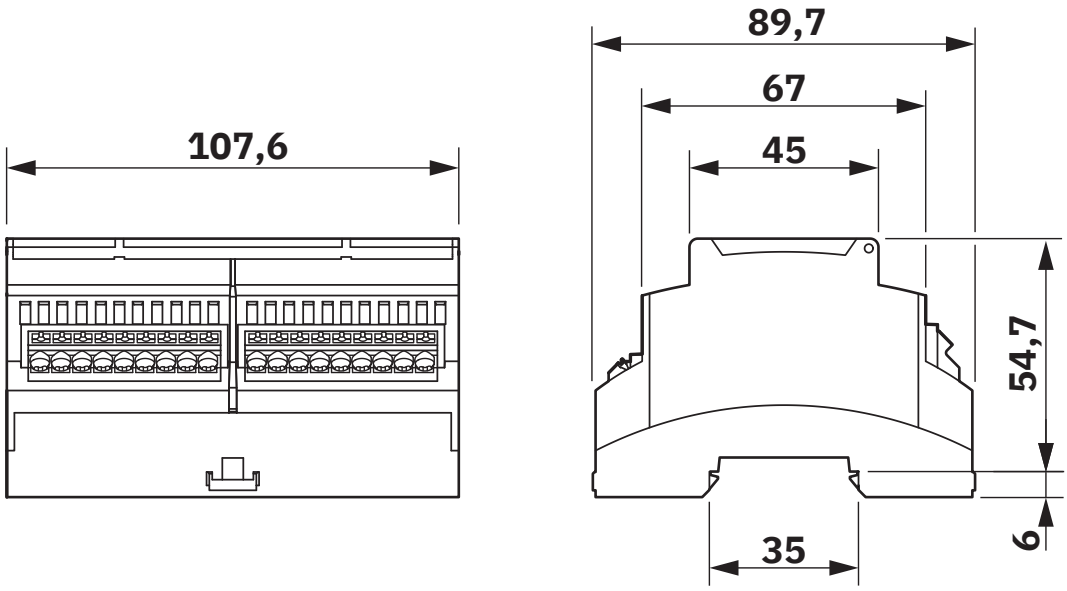

Dimensions

Block diagram

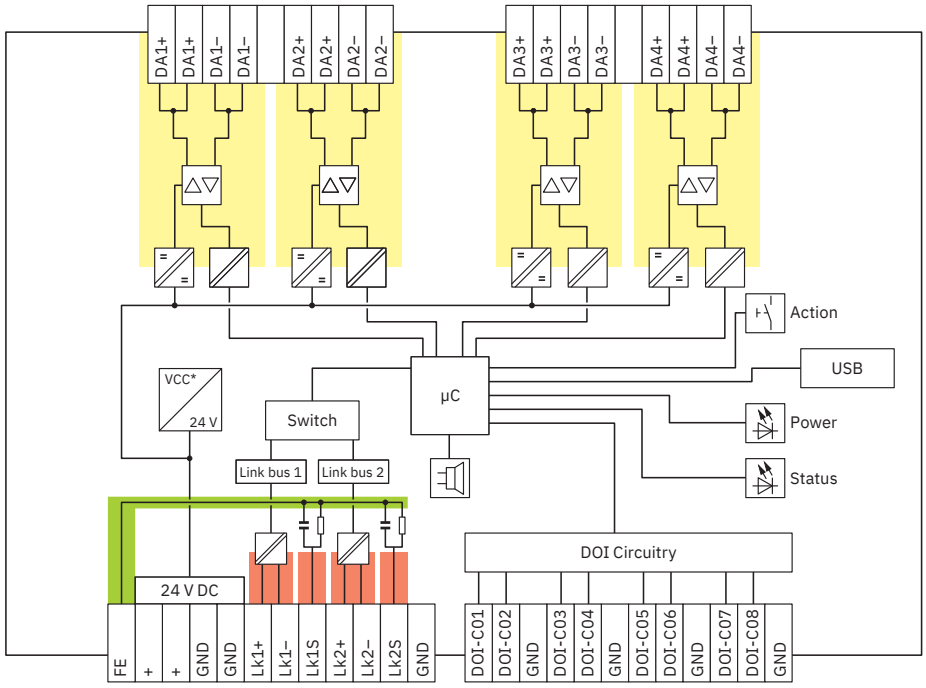

Internal wiring of the terminal points

Classifications

ECLASS

ECLASS-13.0	27242604
ECLASS-15.0	27242604

ETIM

ETIM 10.0	EC001599

Environmental product compliance

EU RoHS

Fulfills EU RoHS substance requirements	Yes
Exemption	7(a), 7(c)-I

China RoHS

Environment friendly use period (EFUP)	EFUP-50
	An article-related China RoHS declaration table can be found in the download area for the respective article under "Manufacturer declaration". For all articles with EFUP-E, no China RoHS declaration table issued and required.

EU REACH SVHC

REACH candidate substance (CAS No.)	Lead titanium zirconium oxide(CAS: 12626-81-2)
	Lead(CAS: 7439-92-1)

Phoenix Contact 2026 © - all rights reserved
https://www.phoenixcontact.com

PHOENIX CONTACT Ltd
Halesfield 13, Telford
Shropshire, TF7 4PG
01952 681700
info@phoenixcontact.co.uk