# TRIO3-PS/3AC/24DC/20/8C/IOL - Power supply

1362791

https://www.phoenixcontact.com/gb/products/1362791

Please be informed that the data shown in this PDF document is generated from our online catalog. Please find the complete data in the user documentation. Our general terms of use for downloads are valid.

CRA-READY



Primary-switched power supply unit TRIO POWER, Push-in connection, 8-channel electronic circuit breaker, IO-Link, DIN rail mounting, input: 3-phase, output: 24 V DC / 20 A, adjustable from 24 V DC ... 28 V DC, The product is being prepared for compliance with the Cyber Resilience Act (CRA).

## Product description

All TRIO POWER power supplies feature smart diagnostics with multicolor LEDs and a collective alarm contact. This is used to signal all relevant states such as DC OK, overload, and short circuit. Devices with integrated multi-channel device protection and an IO-Link interface for diagnostics and parameterization are optionally available. The compact devices reduce the installation work, space requirements in the control cabinet, and material costs. TRIO POWER power supplies therefore provide power reliability in one device.

## Your advantages

- Power reliability in one device due to the integrated multi-channel device protection
- Low installation costs due to 70% less wiring and installation effort
- Easy commissioning through intuitive manual operation or parameterization via IO-Link
- High availability due to prioritized load management with intelligent self-monitoring functionality
- Space-saving due to its low overall width and capability of being mounted side by side

ELEKTROGERÄTE RÜCKNAHME

## Commercial data

| | |
|---|---|
| Item number | 1362791 |

| | |
|---|---|
| Packing unit | 1 pc |
| Minimum order quantity | 1 pc |
| Sales key | CMPD36 |
| Product key | CMPD36 |
| GTIN | 4063151706449 |
| Weight per piece (including packing) | 1,372 g |
| Weight per piece (excluding packing) | 1,146 g |
| Customs tariff number | 85044095 |
| Country of origin | CN |

# Technical data

## Notes

Note on application

| | |
|---|---|
| Note on application | As things stand now, we are preparing the product so that, as of December 11, 2027, it will comply with the requirements of the EU Cyber Resilience Act (CRA) based on the information currently available regarding the CRA. |

## Input data

AC operation

| | |
|---|---|
| Supply system configuration | Star network (TN, TT, IT (PE)) |
| Nominal input voltage range | 3x 400 V AC ... 500 V AC |
| Input voltage range | 3x 400 V AC ... 500 V AC -20 % ... +10 % |
| | 2x 400 V AC ... 500 V AC ±10 % |
| Typical national grid voltage | 3x 400 V AC |
| | 3x 480 V AC |
| Voltage type of supply voltage | AC |
| Inrush current | < 18 A (25 °C) |
| Inrush current integral ($I^2t$) | < 0.48 $A^2s$ |
| Frequency range ($f_N$) | 50 Hz ... 60 Hz ±10 % |
| Mains buffering time | typ. 28 ms (3x 400 V AC) |
| | typ. 28 ms (3x 480 V AC) |
| Current consumption | 3x 0.77 A (3x 400 V AC) |
| | 3x 0.63 A (3x 500 V AC) |
| | 2x 1.37 A (2x 400 V AC) |
| | 2x 1.13 A (2x 500 V AC) |
| Protective circuit | Transient protection; Varistor |
| Power factor | 0.93 (3x 480 V AC) |
| Device mains fuse | 3.15 A internal (device protection) |
| Recommended breaker for input protection | 3x 6 A ... 16 A (Characteristic B, C, D, K or comparable) |
| Discharge current to PE | < 3.5 mA |

## Output data

| | |
|---|---|
| Efficiency | typ. 94.4 % (3x 400 V AC) |
| | typ. 94.5 % (3x 480 V AC) |
| Nominal output voltage | 24 V DC |
| Setting range of the output voltage ($U_{Set}$) | 24 V DC ... 28 V DC (> 24 V DC, constant capacity restricted) |
| Nominal output current ($I_N$) | 20 A |
| Dynamic Boost ($I_{Dyn.Boost}$) | max. 30 A (5 s) |
| No. of channels | 8 |
| Nominal current per channel | 1 A |
| | 2 A |

| | |
|---|---|
| | 3.8 A |
| | 4 A |
| | 6 A |
| | 8 A |
| | 10 A |
| Rated current (pre-adjusted) | 1 A |
| Waiting time after switch off of a channel | 5 s |
| Switch-on delay of the channels | 100 ms |
| Short-circuit-proof | yes |
| No-load proof | yes |
| Derating | 60 °C ... 70 °C |
| Crest factor | typ. 1.51 (3x 400 V AC) |
| | typ. 1.69 (3x 480 V AC) |
| Output power ($P_N$) | 480 W |
| Output power ($P_{Dyn. Boost}$) | max. 720 W (5 s) |
| Connection in parallel | no |
| Connection in series | no |
| Max. capacitive load | 30 mF |
| Feedback voltage resistance | ≤ 35 V DC |
| Protection against overvoltage at the output (OVP) | ≤ 35 V DC |
| Residual ripple | typ. 15 $mV_{PP}$ (with nominal values) |
| Control deviation | < 1 % (change in load, static 10 % ... 90 %) |
| | < 3 % (change in load, dynamic 10 % ... 90 %) |
| | < 0.1 % (change in input voltage ±10 %) |
| Rise time | ≤ 1 s ($U_{Out}$ = 10 % ... 90 %) |
| Minimum no-load power dissipation | < 3 W (3x 400 V AC) |
| Maximum no-load power dissipation | < 3.1 W (3x 480 V AC) |
| Minimum nominal load power dissipation | < 26.08 W (3x 400 V AC) |
| Power loss nominal load max. | < 27.35 W (3x 480 V AC) |
| Integrated fuse protection | yes |
| Fuse protection (secondary side) | electronic |

## Connection data

### Input

| | |
|---|---|
| Position | 1.x |

### Connection technology: Positions

| | |
|---|---|
| Position marking | 1.1 (L1), 1.2 (L2), 1.3 (L3), 1.4 (⏚) |

### Conductor connection

| | |
|---|---|
| Connection method | Push-in connection |
| rigid (Terminal block) | 0.2 mm² ... 4 mm² |
| rigid (recommended) | 1.5 mm² (recommended) |
| flexible (Klemme) | 0.2 mm² ... 2.5 mm² |

| | |
|---|---|
| flexible (empfohlen) | 1.5 mm² (recommended) |
| flexible with ferrule without plastic sleeve (Terminal block) | 0.25 mm² ... 2.5 mm² |
| flexible with ferrule without plastic sleeve (recommended) | 1.5 mm² (recommended) |
| flexible with ferrule with plastic sleeve (Terminal block) | 0.25 mm² ... 2.5 mm² |
| flexible with ferrule with plastic sleeve (recommended) | 1.5 mm² (recommended) |
| AWG (Terminal block) | 24 ... 12 (Cu) |
| AWG (recommended) | 16 (recommended) |
| Stripping length (starr/flexibel) | 10 mm (Rigid/flexible/ferrule) |

Output

| | |
|---|---|
| Position | 2.x |

Connection technology: Positions

| | |
|---|---|
| Position marking | 2.1, 2.2, 2.3, 2.4, 2.5, 2.6, 2.7, 2.8 (+) |

Conductor connection

| | |
|---|---|
| Connection method | Push-in connection |
| rigid (Terminal block) | 0.2 mm² ... 4 mm² |
| rigid (recommended) | 1.5 mm² (recommended) |
| flexible (Klemme) | 0.2 mm² ... 2.5 mm² |
| flexible (empfohlen) | 1.5 mm² (recommended) |
| flexible with ferrule without plastic sleeve (Terminal block) | 0.25 mm² ... 2.5 mm² (Cu) |
| flexible with ferrule without plastic sleeve (recommended) | 1.5 mm² (recommended) |
| flexible with ferrule with plastic sleeve (Terminal block) | 0.25 mm² ... 2.5 mm² |
| flexible with ferrule with plastic sleeve (recommended) | 1.5 mm² (recommended) |
| AWG (Terminal block) | 24 ... 12 (Cu) |
| AWG (recommended) | 16 (recommended) |
| Stripping length (starr/flexibel) | 10 mm (Rigid/flexible/ferrule) |

Output

| | |
|---|---|
| Position | 2.x |

Connection technology: Positions

| | |
|---|---|
| Position marking | 2.9, 2.10 (-) |

Conductor connection

| | |
|---|---|
| Connection method | Push-in connection |
| rigid (Terminal block) | 0.2 mm² ... 10 mm² |
| rigid (recommended) | 4 mm² (recommended) |
| flexible (Klemme) | 0.2 mm² ... 6 mm² |
| flexible (empfohlen) | 4 mm² (recommended) |
| flexible with ferrule without plastic sleeve (Terminal block) | 0.25 mm² ... 6 mm² |
| flexible with ferrule without plastic sleeve (recommended) | 4 mm² (recommended) |
| flexible with ferrule with plastic sleeve (Terminal block) | 0.25 mm² ... 6 mm² |
| flexible with ferrule with plastic sleeve (recommended) | 4 mm² (recommended) |
| AWG (Terminal block) | 24 ... 8 (Cu) |
| AWG (recommended) | 12 (recommended) |

| | |
|---|---|
| Stripping length (starr/flexibel) | 12 mm (Rigid/flexible/ferrule) |

Signal

| | |
|---|---|
| Position | 3.x |

Connection technology: Positions

| | |
|---|---|
| Position marking | 3.1 (13), 3.2 (14) |

Conductor connection

| | |
|---|---|
| Connection method | Push-in connection |
| rigid (Terminal block) | 0.2 mm² ... 1.5 mm² |
| rigid (recommended) | 0.5 mm² (recommended) |
| flexible (Klemme) | 0.2 mm² ... 1.5 mm² |
| flexible (empfohlen) | 0.5 mm² (recommended) |
| flexible with ferrule without plastic sleeve (Terminal block) | 0.25 mm² ... 1.5 mm² (Cu) |
| flexible with ferrule without plastic sleeve (recommended) | 0.5 mm² (recommended) |
| flexible with ferrule with plastic sleeve (Terminal block) | 0.25 mm² ... 0.75 mm² |
| flexible with ferrule with plastic sleeve (recommended) | 0.5 mm² (recommended) |
| AWG (Terminal block) | 24 ... 16 (Cu) |
| AWG (recommended) | 20 (recommended) |
| Stripping length (starr/flexibel) | 10 mm (Rigid/flexible/ferrule) |

Communication

| | |
|---|---|
| Position | 5.x |

Connection technology: Positions

| | |
|---|---|
| Position marking | 5.1 (L+), 5.2 (C/Q), 5.3 (L-) |

Conductor connection

| | |
|---|---|
| Connection method | Push-in connection |
| rigid (Terminal block) | 0.2 mm² ... 1.5 mm² |
| rigid (recommended) | 0.5 mm² (recommended) |
| flexible (Klemme) | 0.2 mm² ... 1.5 mm² |
| flexible (empfohlen) | 0.5 mm² (recommended) |
| flexible with ferrule without plastic sleeve (Terminal block) | 0.25 mm² ... 1.5 mm² (Cu) |
| flexible with ferrule without plastic sleeve (recommended) | 0.5 mm² (recommended) |
| flexible with ferrule with plastic sleeve (Terminal block) | 0.25 mm² ... 0.75 mm² |
| flexible with ferrule with plastic sleeve (recommended) | 0.5 mm² (recommended) |
| AWG (Terminal block) | 24 ... 16 (Cu) |
| AWG (recommended) | 20 (recommended) |
| Stripping length (starr/flexibel) | 10 mm (Rigid/flexible/ferrule) |

## Interfaces

IO-Link

| | |
|---|---|
| Specification | V1.1 |
| Interface | IO-Link |

| | |
|---|---|
| Number of interfaces | 1 |
| Connection method | Push-in connection |
| Position | 5.x |
| Position marking | 5.1 (L+), 5.2 (C/Q), 5.3 (L-) |
| Transmission physics | 3-wire, standard industrial cable |
| Reverse polarity protection | yes |
| Transmission speed | 38.4 kbps (COM2) |
| Cycle time | 40 ms |
| Amount of process data | 6 Byte (Input data) |
| Device ID | $040116_{hex}/262422_{dez}$ |
| Vendor ID | $00B0_{hex}$ / $176_{dez}$ |

## Signaling

### LED signaling

| | |
|---|---|
| Types of signaling | LED DC OK - signal state operation ($U_N$ = 24 V DC, $I_{Out}$ = $I_N$) |
| Function | Visual operating state display |
| Color | red, yellow, green (multicolor LED) |
| LED off | Supply voltage input AC not present (Off) |
| LED on (green), DC OK | $U_{Out}$ > 21 V DC and $I_{Out}$ < 0.9 x $I_N$ (On (green), DC OK) |
| LED on (yellow), IOut > 90 % | $U_{Out}$ > 21 V DC and $I_{Out}$ > 0.9 x $I_N$ (On (yellow), $I_{Out}$ > 90% ) |
| LED on (flashing red) OVP | $U_{OUT}$ > OVP (Over voltage protection) (on (flashing red)) |

### Signal output DC OK

| | |
|---|---|
| Position | 3.x |
| Type of signaling | DC OK switch contact - signal state operation ($U_N$ = 24 V DC, $I_{Out}$ = $I_N$) |
| Position marking | 3.1 (13), 3.2 (14) |
| Function | Operating state forwarding |
| Switch contact (floating) | OptoMOS |
| Switching voltage | max. 30 V DC (SELV) |
| Current carrying capacity | max. 100 mA |
| State condition (Contact closed) | $U_{Out}$ > 21 V DC and $I_{Out}$ < 0.9 x $I_N$ (Contact closed) |
| State condition (Contact open) | $U_{Out}$ < 21 V DC or $I_{Out}$ > 0.9 x $I_N$ (averaging over 60 s) (Contact open) |
| State condition (Contact open_1) | Channel triggered or defective or OVP active |

## Electrical properties

| | |
|---|---|
| Number of phases | 3 |
| Insulation voltage input/output | 6 kV DC (type test) |
| | 3.1 kV DC (routine test) |

## Product properties

| | |
|---|---|
| Product type | Power supply |
| Product family | TRIO POWER |
| | > 1100000 h (25 °C) |

| | |
|---|---|
| MTBF (IEC 61709, SN 29500) | > 600000 h (40 °C) |
| | > 230000 h (60 °C) |
| Special properties | The product is being prepared for compliance with the Cyber Resilience Act (CRA) |
| Environmental protection directive | RoHS Directive 2011/65/EU |
| | WEEE |
| | Reach |

Insulation characteristics

| | |
|---|---|
| Protection class | I |
| Overvoltage category (EN 61010-1) | III (≤ 2000 m) |
| | II (≤ 5000 m) |
| Overvoltage category (EN 61010-2-201) | III (≤ 2000 m) |
| | II (≤ 5000 m) |
| Degree of pollution | 2 |

## Dimensions

Item dimensions

| | |
|---|---|
| Width | 88 mm |
| Height | 135 mm |
| Depth | 132 mm |
| Depth (Device depth (DIN rail mounting)) | 125 mm (Device depth (DIN rail mounting)) |

Installation dimensions

| | |
|---|---|
| Installation distance right/left (active) | 15 mm / 15 mm |
| Installation distance right/left (passive) | 0 mm / 0 mm (≤ 40 °C) |

## Mounting

| | |
|---|---|
| Mounting type | DIN rail mounting |
| Assembly note | alignable: horizontally 0 mm, vertically 50 mm |
| Mounting position | horizontal DIN rail NS 35, EN 60715 |
| With protective coating | no |

## Material specifications

| | |
|---|---|
| Flammability rating according to UL 94 | V0 (Housing, terminal blocks) |
| Hood version | Polycarbonate |
| Side element version | Aluminum |

## Environmental and real-life conditions

Ambient conditions

| | |
|---|---|
| Degree of protection | IP20 |
| Ambient temperature (operation) | -25 °C ... 70 °C (> 60 °C Derating: 2,5 %/K) |
| Ambient temperature (storage/transport) | -40 °C ... 85 °C |
| Ambient temperature (start-up type tested) | -40 °C |
| Maximum altitude (Maximum) | ≤ 5000 m |

| | |
|---|---|
| Maximum altitude (Output power derating) | > 2000 m (Derating: 10%/1000 m) |
| Max. permissible relative humidity (operation) | ≤ 95 % (at 25 °C, non-condensing) |
| Shock (operation) | 18 ms, 30g, per spatial direction (IEC 60068-2-27) |
| Vibration (operation) | 10 Hz ... 50 Hz, amplitude ±0.2 mm (IEC 60068-2-6) |
| | 50 Hz ... 150 Hz, 2.3g, 90 min. |
| Temp code | T4 (-25 ... +70 °C; > 60 °C, Derating: 2,5 %/K) |

## Standards and regulations

Safety of power supply units up to 1100 V (insulation distances)

| | |
|---|---|
| Standard designation | Safety of power supply units up to 1100 V (insulation distances) |
| Standards/specifications | DIN EN 61558-2-16 |

Electrical safety

| | |
|---|---|
| Standard designation | Electrical safety |
| Standards/specifications | IEC 61010-2-201 (SELV) |

Safety for measurement, control, and laboratory equipment

| | |
|---|---|
| Standard designation | Safety for equipment for measurement, control, and laboratory use |
| Standards/specifications | IEC 61010-1 |

Safety extra-low voltage

| | |
|---|---|
| Standard designation | Safety extra-low voltage |
| Standards/specifications | IEC 61010-1 (SELV) |

Protective extra-low voltage

| | |
|---|---|
| Standard designation | Protective extra-low voltage |
| Standards/specifications | IEC 61010-2-201 (PELV) |

Safe isolation

| | |
|---|---|
| Standard designation | Safe isolation |
| Standards/specifications | IEC 61558-2-16 |
| | IEC 61010-2-201 |

Limitation of harmonic line currents

| | |
|---|---|
| Standard designation | Limitation of harmonic line currents |
| Standards/specifications | EN 61000-3-2 |

Mains variation/undervoltage

| | |
|---|---|
| Standard designation | Mains variation/undervoltage |
| Standards/specifications | SEMI F47 |
| | EN 61000-4-11 |

## Approvals

UL

| | |
|---|---|
| Identification | UL/C-UL Listed UL 61010-1 |

UL

| | |
|---|---|
| Identification | UL/C-UL Listed UL 61010-2-201 |

UL/CSA

| | |
|---|---|
| Identification | UL 1310 / CSA C22.2 No. 223 (NEC Class 2) |

UL

| | |
|---|---|
| Identification | UL 2367 (Standard for Safety for Solid State Overcurrent Protectors) |

ANSI/UL

| | |
|---|---|
| Identification | PROCESS CONTROL EQUIPEMENT FOR HAZARDOUS LOCATIONS |
| | (EN) • This equipment is suitable for use in Class I, Division 2, Groups A, B, C and D, Hazardous Locations, or non-hazardous locations only.<br>(FR) • Cet appareil convient uniquement pour une utilisation en atmosphères explosibles de classe I, division 2, groupes A, B, C et D ou en atmosphères non explosibles. |
| | (EN) • WARNING: Explosion Hazard - Do not connect or disconnect equipment unless power has been switched off or the area is known to be non-hazardous.<br>(FR) • AVERTISSEMENT : risque d'explosion - ne pas connecter ou déconnecter les équipements sauf si l'alimentation a été coupée ou si la zone est réputée non dangereuse. |
| | (EN) • If the equipment is used in a manner not specified by the manufacturer, the protection provided by the equipment may be impaired.<br>(FR) • Si l'équipement est utilisé d'une manière non spécifiée par le fabricant, la protection fournie par cet équipement peut être altérée. |
| | (EN) • This equipement must be installed in a suitable, tool secured/key locked enclosure.<br>(FR) • Cet équipement doit être installé dans un boîtier approprié, verrouillé par une clé ou dont l'ouverture nécessite l'utilisation d'un outil. |

## EMC data

| | |
|---|---|
| Electromagnetic compatibility | Conformance with EMC Directive 2014/30/EU |
| Low Voltage Directive | Conformance with Low Voltage Directive 2014/35/EC |
| Interference emission | Interference emission in accordance with EN 61000-6-3 (residential and commercial) and EN 61000-6-4 (industrial) |
| Noise immunity | Immunity in accordance with EN 61000-6-1 (residential), EN 61000-6-2 (industrial) |

Conducted noise emission

| | |
|---|---|
| Standards/regulations | EN 55016 |
| | EN 61000-6-3 (Class B) |

Noise emission

| | |
|---|---|
| Standards/regulations | EN 55016 |
| | EN 61000-6-3 (Class B) |

Harmonic currents

| | |
|---|---|
| Standards/regulations | EN 61000-3-2 |
| | EN 61000-3-2 (Class A) |
| Frequency range | 0 kHz ... 2 kHz |

Flicker

| | |
|---|---|
| Standards/regulations | EN 61000-3-3 |
| | EN 61000-3-3 |

Electrostatic discharge

| | |
|---|---|
| Standards/regulations | EN 61000-4-2 |

Electrostatic discharge

| | |
|---|---|
| Contact discharge | 6 kV (Test Level 3) |
| Discharge in air | 8 kV (Test Level 3) |
| Comments | Criterion B |

Electromagnetic HF field

| | |
|---|---|
| Standards/regulations | EN 61000-4-3 |

Electromagnetic HF field

| | |
|---|---|
| Frequency range | 80 MHz ... 1 GHz |
| Test field strength | 10 V/m (Test Level 3) |
| Frequency range | 1 GHz ... 6 GHz |
| Test field strength | 10 V/m (Test Level 3) |
| Comments | Criterion A |

Fast transients (burst)

| | |
|---|---|
| Standards/regulations | EN 61000-4-4 |

Fast transients (burst)

| | |
|---|---|
| Input | asymmetrical 2 kV (Test Level 3) |
| Output | asymmetrical 2 kV (Test Level 3) |
| Signal | asymmetrical 1 kV (Test Level 2) |
| Comments | Criterion A |

Surge voltage load (surge)

| | |
|---|---|
| Standards/regulations | EN 61000-4-5 |

Surge voltage load (surge)

| | |
|---|---|
| Input | symmetrical 2 kV (Test Level 3) |
| | asymmetrical 4 kV (Test Level 4) |
| Output | symmetrical 1 kV (Test Level 2) |
| | asymmetrical 2 kV (Test Level 3) |
| Signal | asymmetrical 1 kV (Test Level 2) |
| Comments | Criterion A |

Conducted interference

| | |
|---|---|
| Standards/regulations | EN 61000-4-6 |

Conducted interference

| | |
|---|---|
| Input/output/signal | asymmetrical |
| Frequency range | 0.15 MHz ... 80 MHz |
| Comments | Criterion A |
| Voltage | 10 V (Test Level 3) |

Voltage dips

| | |
|---|---|
| Standards/regulations | EN 61000-4-11 |
| Voltage | 400 V AC |
| Frequency | 50 Hz |
| Voltage dip | 70 % |
| Number of periods | 25 periods |
| Additional text | Class 3 |
| Comments | Criterion A |
| Voltage dip | 40 % |
| Number of periods | 10 periods |
| Additional text | Class 3 |
| Comments | Criterion A |
| Voltage dip | 0 % |
| Number of periods | 1 period |
| Additional text | Class 3 |
| Comments | Criterion A |

Criteria

| | |
|---|---|
| Criterion A | Normal operating behavior within the specified limits. |
| Criterion B | Temporary impairment to operational behavior that is corrected by the device itself. |

## Drawings

Dimensional drawing

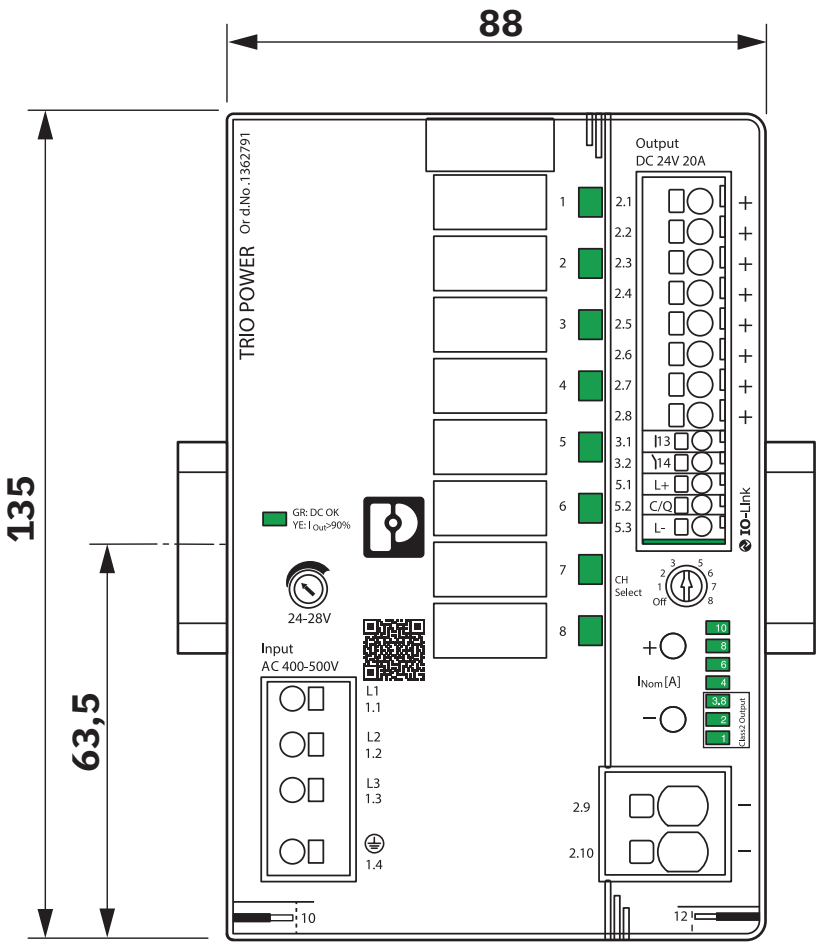


Device dimensions (dimensions in mm)

Dimensional drawing

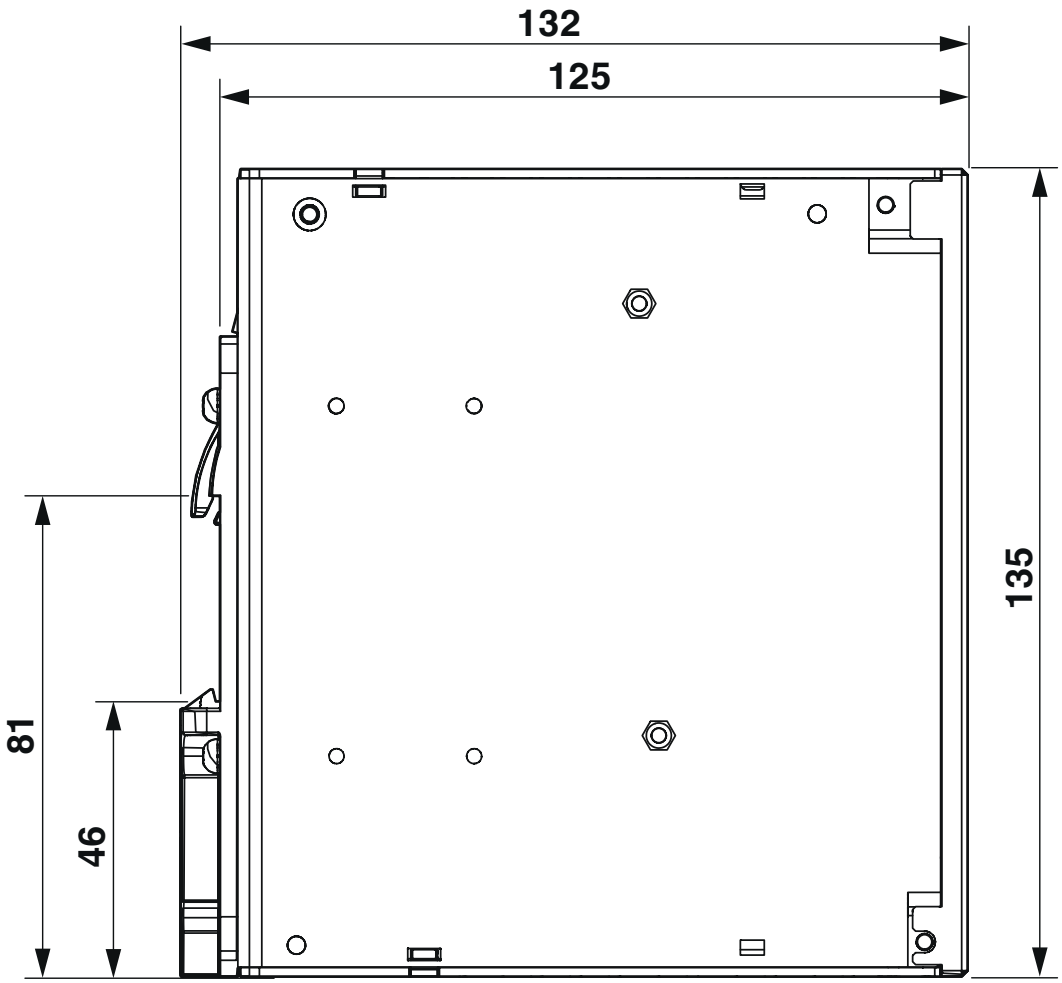


Device dimensions (dimensions in mm)

Schematic diagram

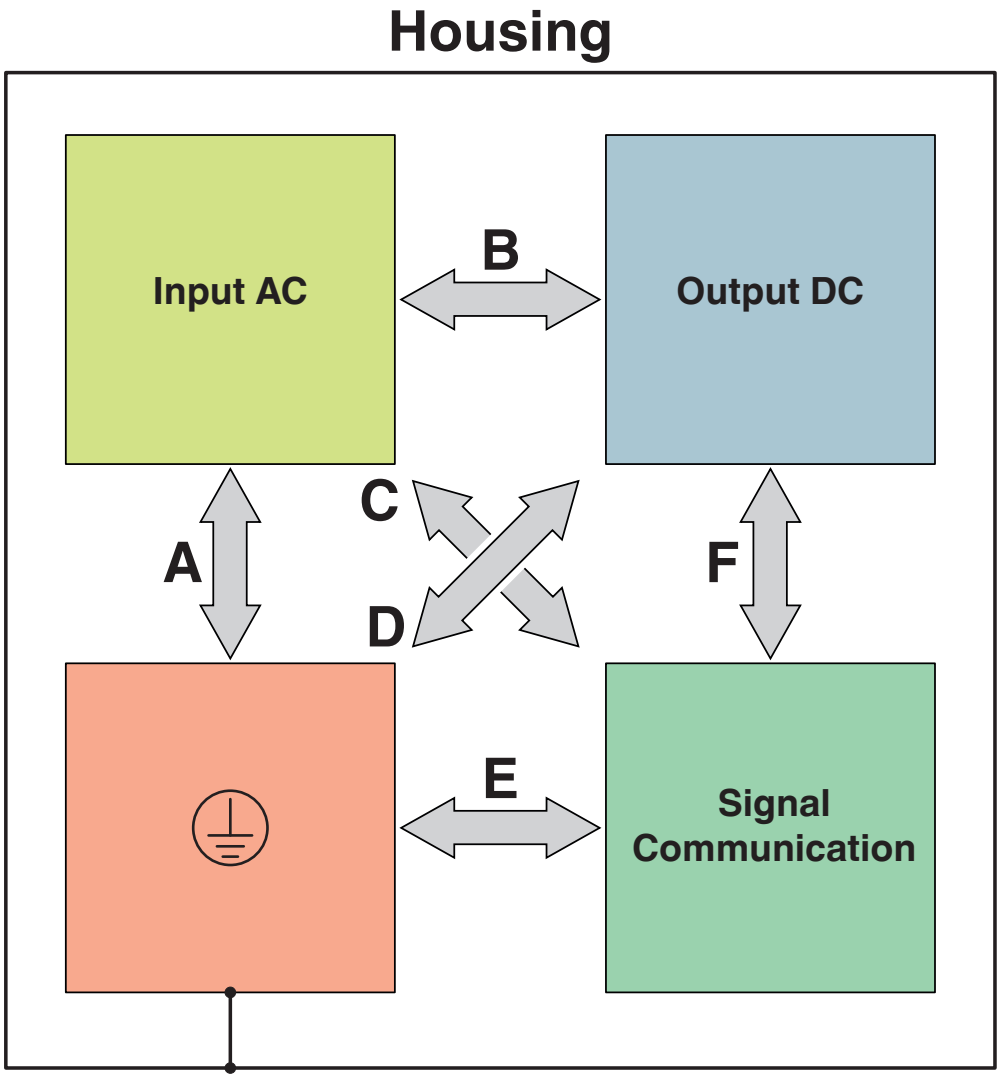


Test sections, insulation voltage

Diagram

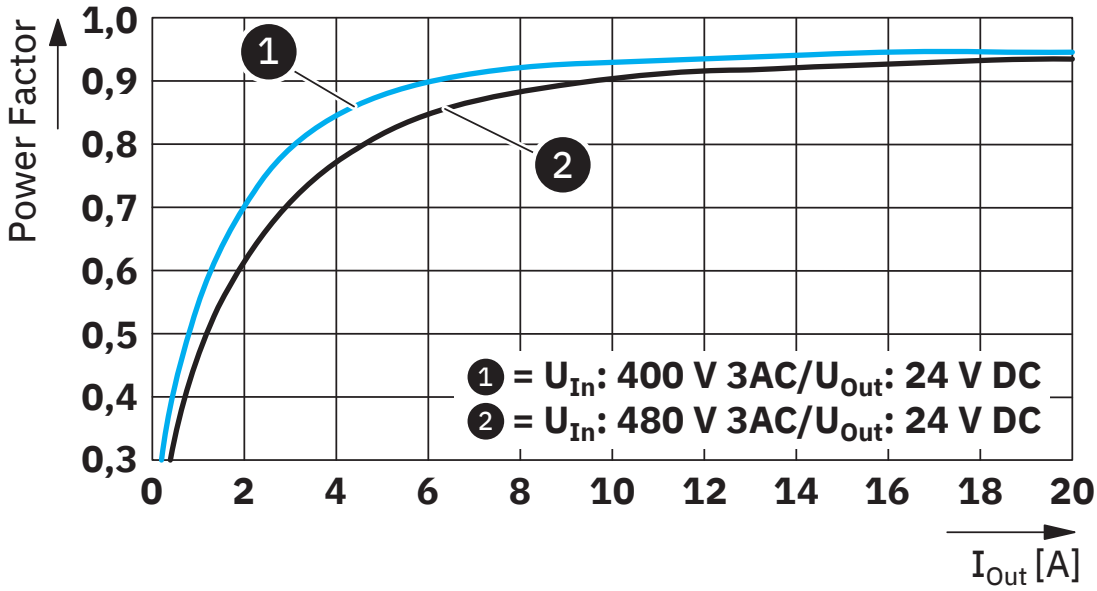


Power factor

Diagram

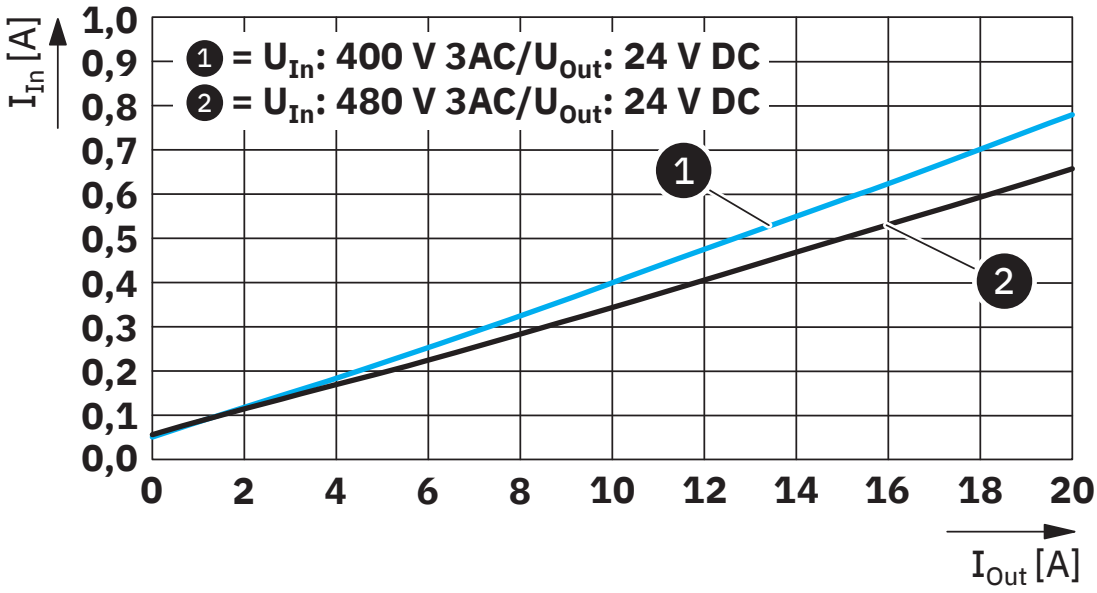


Input current/output current

Diagram

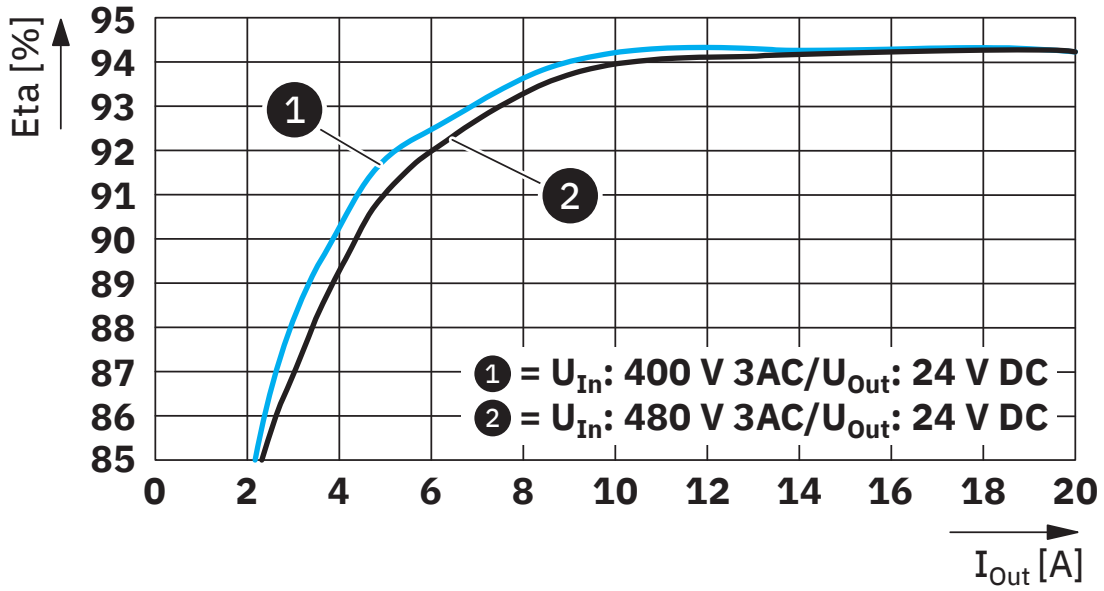


Efficiency

Diagram

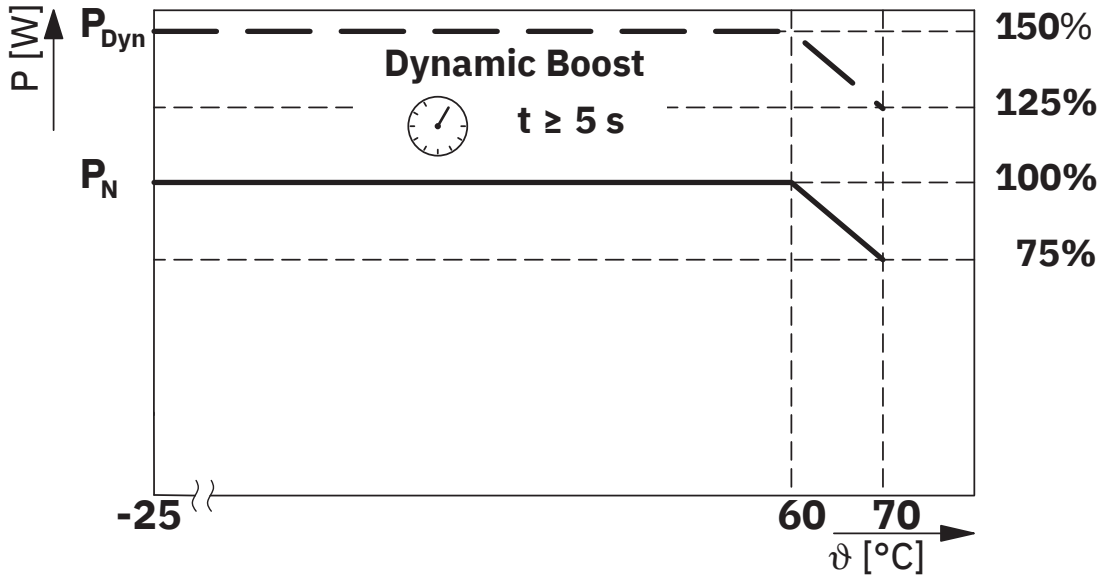


Temperature-dependent derating

Diagram

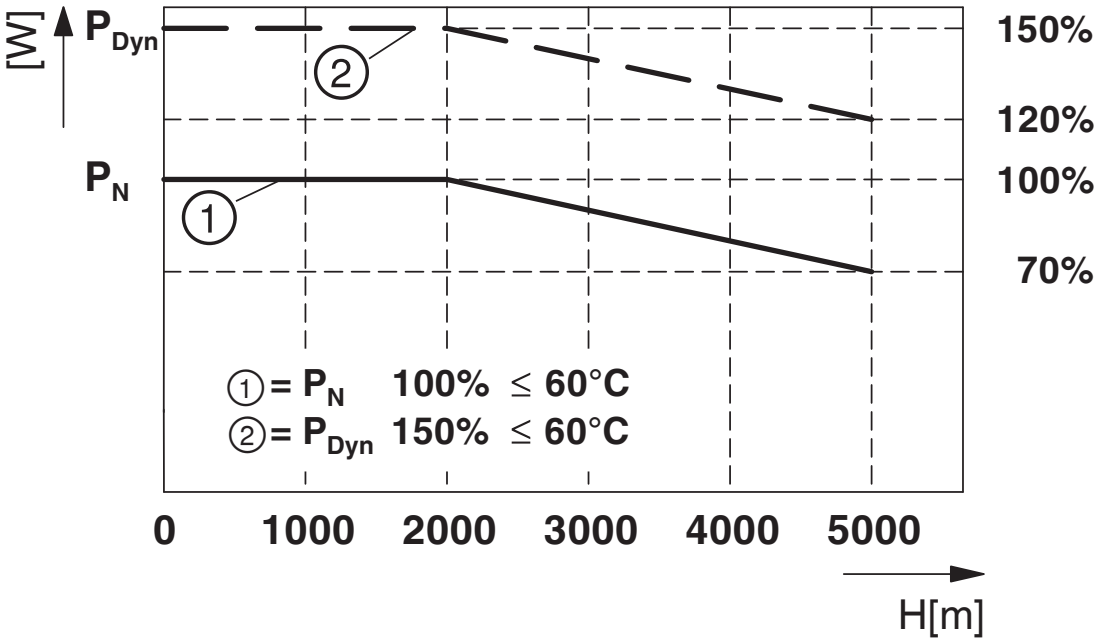


Altitude-dependent derating

Block diagram

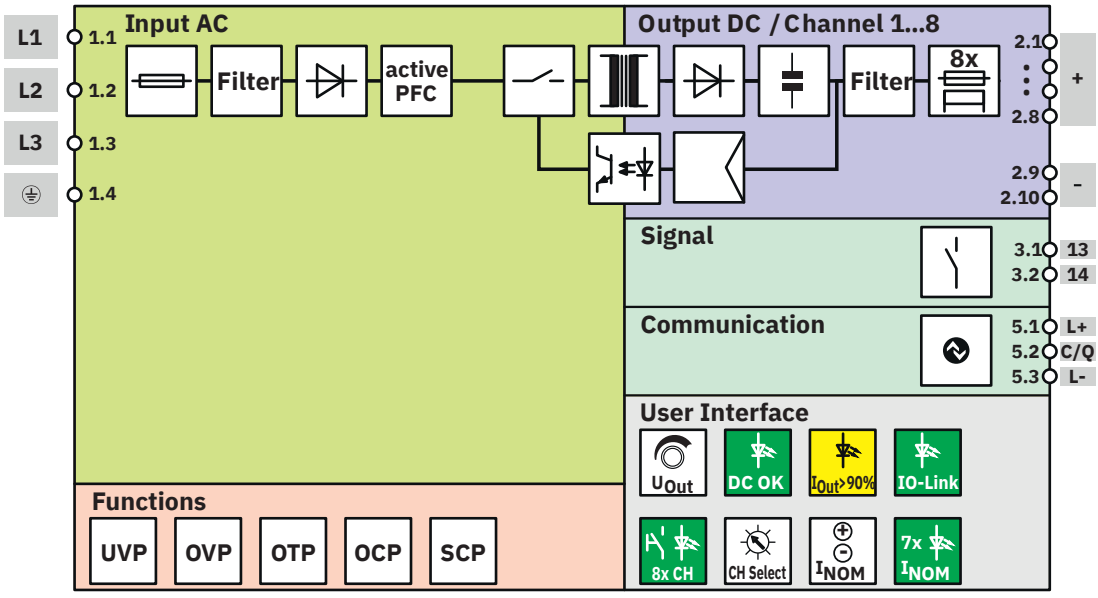


Block diagram

## Approvals

To download certificates, visit the product detail page: https://www.phoenixcontact.com/gb/products/1362791

**IECEE CB Scheme**
Approval ID: DK-142599-A1-UL

**cULus Listed**
Approval ID: E123528-20220304

**EAC**
Approval ID: KZ7500651 0101 12535

**IECEE CB Scheme**
Approval ID: DK-142599-A1-UL

**cULus Listed**
Approval ID: E123528-20220304

**cULus Listed**
Approval ID: E199827-20220314

**cULus Listed**
Approval ID: E199827-20220314

## Classifications

### ECLASS

| | |
|---|---|
| ECLASS-13.0 | 27040701 |
| ECLASS-15.0 | 27040701 |

### ETIM

| | |
|---|---|
| ETIM 10.0 | EC002540 |

### UNSPSC

| | |
|---|---|
| UNSPSC 21.0 | 39121000 |

## Environmental product compliance

EU RoHS

| | |
|---|---|
| Fulfills EU RoHS substance requirements | Yes |
| Exemption | 34, 6(c), 7(a), 7(c)-I |

China RoHS

| | |
|---|---|
| Environment friendly use period (EFUP) | EFUP-25 |
| | An article-related China RoHS declaration table can be found in the download area for the respective article under "Manufacturer declaration". For all articles with EFUP-E, no China RoHS declaration table issued and required. |

EU REACH SVHC

| | |
|---|---|
| REACH candidate substance (CAS No.) | Lead(CAS: 7439-92-1) |

Phoenix Contact 2026 © - all rights reserved
https://www.phoenixcontact.com

PHOENIX CONTACT Ltd
Halesfield 13, Telford
Shropshire, TF7 4PG
01952 681700
info@phoenixcontact.co.uk