# HC-D15-BCFS-PR-BK - Protective cover

1346518

https://www.phoenixcontact.com/gb/products/1346518

Please be informed that the data shown in this PDF document is generated from our online catalog. Please find the complete data in the user documentation. Our general terms of use for downloads are valid.



Protective cover D15, for single locking latch, protective cover material: PC, height: 19 mm, seal: yes

## Commercial data

| | |
|---|---|
| Item number | 1346518 |
| Packing unit | 1 pc |
| Minimum order quantity | 1 pc |
| Sales key | AF7AZC |
| Product key | AF7AZC |
| GTIN | 4063151660741 |
| Weight per piece (including packing) | 16.2 g |
| Weight per piece (excluding packing) | 16.2 g |
| Customs tariff number | 85389099 |
| Country of origin | CN |

## Technical data

### Product properties

| | |
|---|---|
| Product type | Protective cover |
| Housing type | Protective cover |
| Type | D15 |
| Retaining cord present | yes |
| Seal present | yes |

### Dimensions

| | |
|---|---|
| Dimensional drawing | 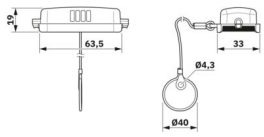 |
| Width | 33 mm |
| Height | 19 mm |
| Length | 63.5 mm |
| Diameter Retaining cord eyelet | 40 mm |

### Material specifications

| | |
|---|---|
| Material Protective cover | PC |
| Flammability rating according to UL 94 | V0 |
| Seal material | NBR |
| Material, protective cover | PC |

### Environmental and real-life conditions

#### Ambient conditions

| | |
|---|---|
| Degree of protection | IP66 |
| Ambient temperature (operation) | -40 °C ... 125 °C |
| Resistance to UV radiation | yes |

### Mounting

| | |
|---|---|
| Assembly note | Double eyelet for mounting on a cable / below screw head |
| | Plastic protective cover for short-term protection |

## Drawings

Dimensional drawing

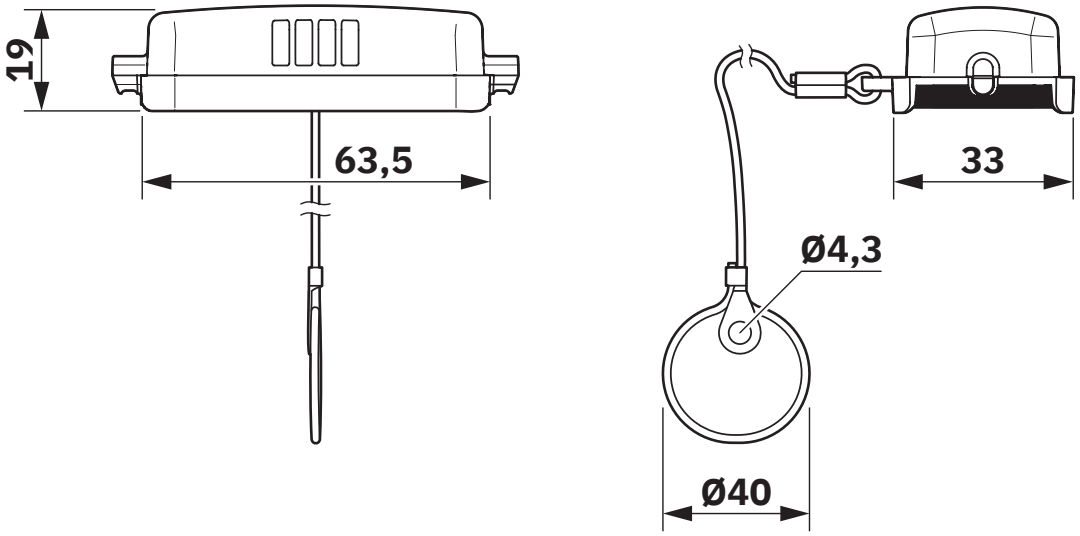


Dimensional drawing

## Approvals

To download certificates, visit the product detail page: https://www.phoenixcontact.com/gb/products/1346518

**DNV**
Approval ID: TAE000037S

## Classifications

### ECLASS

| | |
|---|---|
| ECLASS-13.0 | 27440208 |
| ECLASS-15.0 | 27440208 |

### ETIM

| | |
|---|---|
| ETIM 10.0 | EC002314 |

### UNSPSC

| | |
|---|---|
| UNSPSC 21.0 | 39121400 |

## Environmental product compliance

EU RoHS

| | |
|---|---|
| Fulfills EU RoHS substance requirements | Yes, No exemptions |

China RoHS

| | |
|---|---|
| Environment friendly use period (EFUP) | EFUP-E |
| | No hazardous substances above the limits |

EU REACH SVHC

| | |
|---|---|
| REACH candidate substance (CAS No.) | No substance above 0.1 wt% |


Phoenix Contact 2026 © - all rights reserved
https://www.phoenixcontact.com



PHOENIX CONTACT Ltd
Halesfield 13, Telford
Shropshire, TF7 4PG
01952 681700
info@phoenixcontact.co.uk