AXL SE PD16 24V - Potential distributors

1337223

https://www.phoenixcontact.com/gb/products/1337223

Please be informed that the data shown in this PDF document is generated from our online catalog. Please find the complete data in the user documentation. Our general terms of use for downloads are valid.



Axioline Smart Elements, Potential distribution module, 24 V DC, degree of protection: IP20

Product description

You can integrate Axioline Smart Elements into systems with the Smart Element interface. This Smart Element provides the 24 V sensor supplies U_P1 and U_P2 at eight terminal points each. The Smart Element thus enables you to supply sensors with 24 V DC, whose signal lines are connected to the AXL SE DI16/1 Smart Element, for example. You can also supply analog sensors with current or voltage signals using Smart Elements for potential distribution. Either use the AXL SE PD 24V and AXL SE PD16 GND Smart Elements or the AXL SE PD8/8 24V/GND Smart Element for this purpose.

Your advantages

- 16 terminal points, connected to the 24 V I/O supply U_P
- Maximum permissible load current of the module: 4 A (2 A for each group of a max. 8 sensors)

Commercial data

Item number	1337223
Packing unit	1 pc
Minimum order quantity	1 pc
Sales key	DRIBZ4
Product key	DRIBZ4
GTIN	4063151638542
Weight per piece (including packing)	35.5 g
Weight per piece (excluding packing)	30 g
Customs tariff number	85389099
Country of origin	DE

Technical data

Dimensions

Dimensional drawing	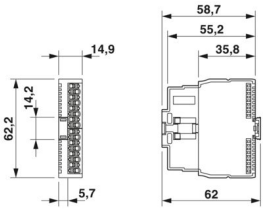
Width	14.9 mm
Height	62.2 mm
Depth	62 mm

Notes

Note on application

Note on application	Only for industrial use

Mounting

Mounting type	Plug-in mounting (Smart Element slot)
Mounting position	See the system in which the Smart Element is used.

Material specifications

Color (Housing)	gray (RAL 7042)

Interfaces

Smart Element interface

Number of interfaces	1
Connection method	Card edge connector

System properties

Programming data

Process data channel	0 bit
Input address area	0 Byte (All systems except PROFIBUS)
	1 Byte (PROFIBUS)
Output address area	0 Byte

Fieldbus data telegram

Required parameter data	1 Byte
Required configuration data	6 Byte

Product properties

Product type	I/O component

Product family	Axioline Smart Elements
Type	modular
Mounting position	See the system in which the Smart Element is used.
Special properties	24 V DC

Insulation characteristics

Overvoltage category	II (IEC 60664-1, EN 60664-1)
Pollution degree	2 (IEC 60664-1, EN 60664-1)

Electrical properties

Maximum power dissipation for nominal condition	1.1 W

Potentials: Communications power supply of the Smart Elements (U_{SE})

Supply voltage	using card edge connectors

Potentials: I/O supply (U_P)

Supply voltage	24 V DC (using card edge connectors)
Supply voltage range	19.2 V DC ... 30 V DC (including all tolerances, including ripple)
Current draw	max. 4 A (2 x 2 A)
Current consumption	min. 10 mA (without connected peripherals)
Protective circuit	Surge protection; See the system in which the Smart Element is used.
	Reverse polarity protection; Polarity protection diode
Protection	See the system in which the Smart Element is used.

Supply:

Designation	Sensor supply (U_P1, U_P2)
Supply voltage	24 V DC (from U_P)

Electrical isolation/isolation of the voltage ranges

Test voltage: Communications supply / 24 V supply (I/O)	500 V AC, 50 Hz, 1 min
Test voltage: Communications supply / functional ground	500 V AC, 50 Hz, 1 min
Test voltage: 24 V supply (I/O) / functional ground	500 V AC, 50 Hz, 1 min

Connection data

Connection technology

Connection name	I/O
Note on the connection method	Please observe the information provided on conductor cross-sections in the “Axioline Smart Elements” user manual.

I/O

Connection method	Push-in connection
Note on the connection method	Please observe the information provided on conductor cross-sections in the “Axioline Smart Elements” user manual.
Conductor cross-section, rigid	0.25 mm² ... 1.5 mm²
Conductor cross-section, flexible	0.25 mm² ... 1.5 mm²
Conductor cross-section AWG	24 ... 16

Conductor cross-section, flexible, with ferrule, with plastic sleeve	0.25 mm² ... 1.5 mm²
Conductor cross-section, flexible, with ferrule, without plastic sleeve	0.25 mm² ... 1.5 mm²
	0.25 mm² ... 1.5 mm²
Conductor cross-section, flexible, with ferrule, with plastic sleeve	0.25 mm² ... 1.5 mm²
Stripping length	8 mm

Environmental and real-life conditions

Ambient conditions

Ambient temperature (operation)	-25 °C ... 60 °C
Degree of protection	IP20
Air pressure (operation)	70 kPa ... 106 kPa (up to 3000 m above sea level)
Air pressure (storage/transport)	70 kPa ... 106 kPa (up to 3000 m above sea level)
Ambient temperature (storage/transport)	-40 °C ... 85 °C
Permissible humidity (operation)	5 % ... 95 % (non-condensing)
Permissible humidity (storage/transport)	5 % ... 95 % (non-condensing)

Mechanical test

Vibration resistance in accordance with EN 60068-2-6/IEC 60068-2-6	5g
Shock in accordance with EN 60068-2-27/IEC 60068-2-27	30g
Continuous shock in accordance with EN 60068-2-27/IEC 60068-2-27	10g

Standards and regulations

Protection class	III (IEC 61140, EN 61140, VDE 0140-1)

Drawings

Dimensional drawing

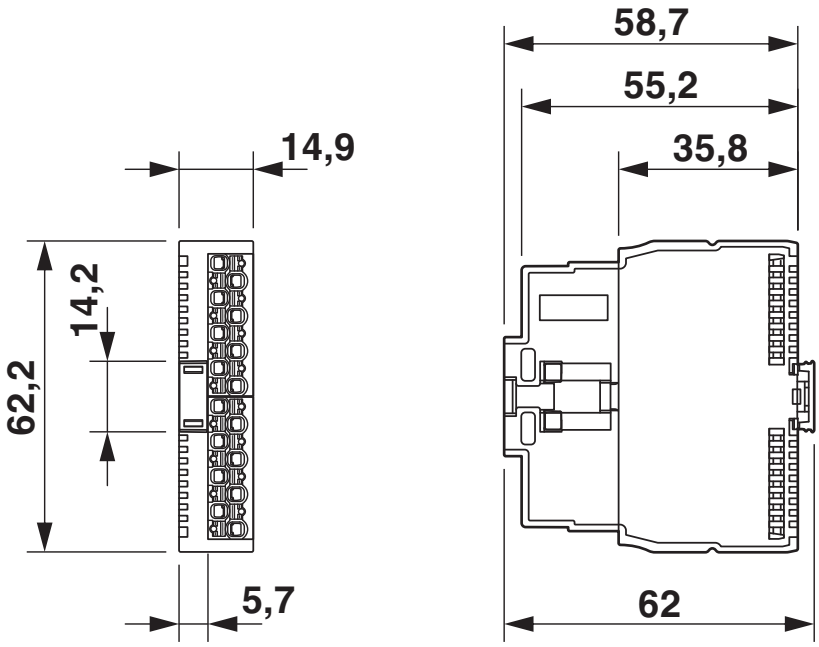

Dimensions

Connection diagram

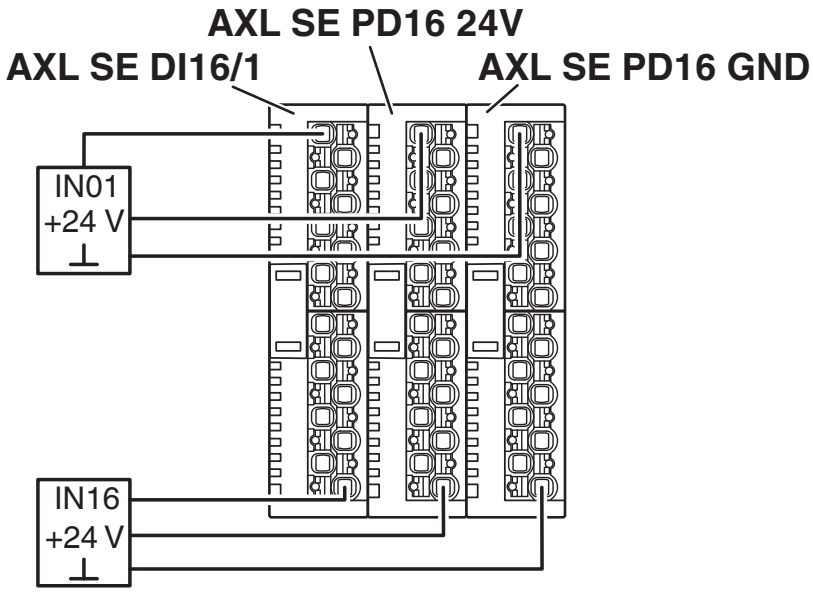

Connection example

Block diagram

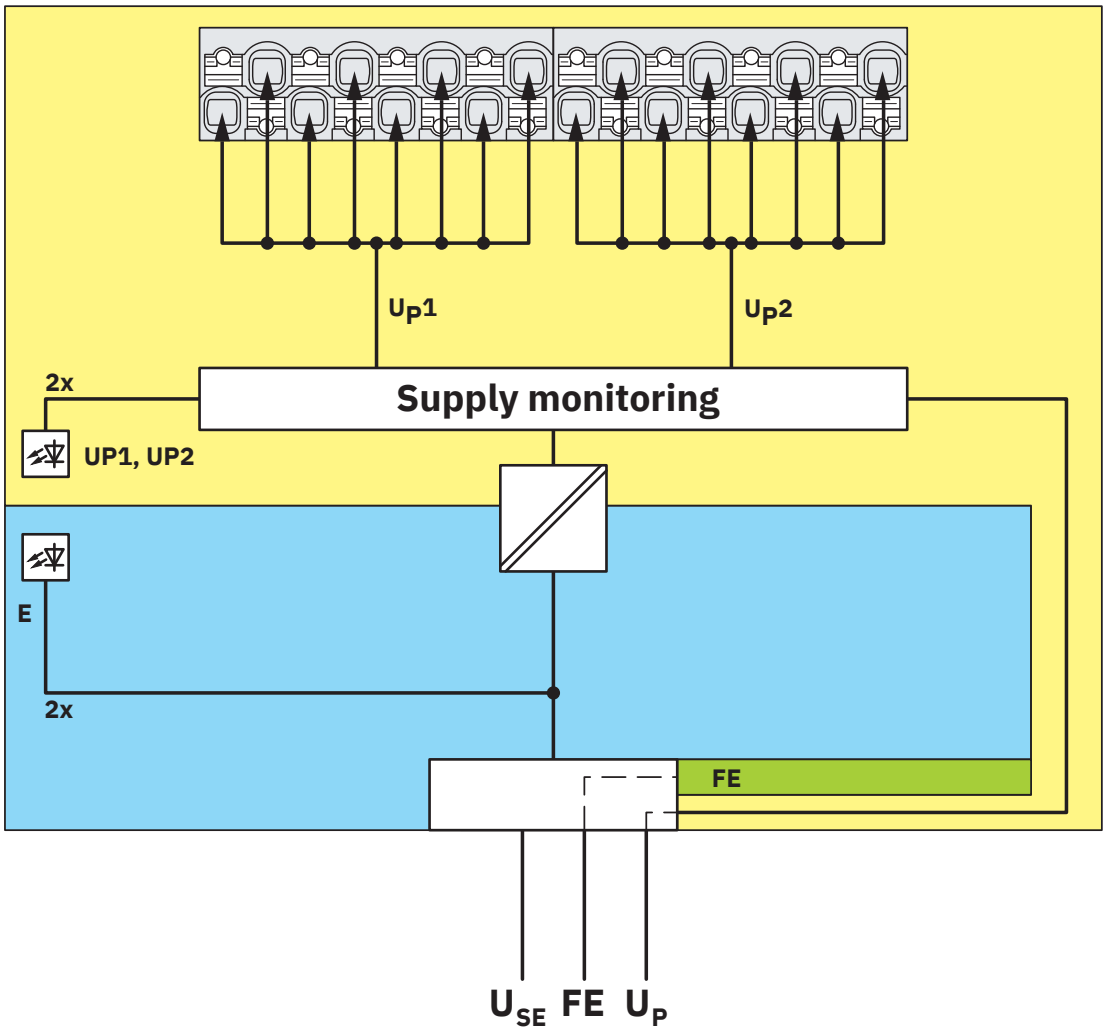

Basic circuit diagram

Approvals

To download certificates, visit the product detail page: https://www.phoenixcontact.com/gb/products/1337223

cULus Listed
Approval ID: E238705

Classifications

ECLASS

ECLASS-13.0	27242610
ECLASS-15.0	27242610

ETIM

ETIM 10.0	EC001600

UNSPSC

UNSPSC 21.0	32151600

Environmental product compliance

EU RoHS

Fulfills EU RoHS substance requirements	Yes
Exemption	7(a), 7(a)-I, 7(c)-I

China RoHS

Environment friendly use period (EFUP)	EFUP-50
	An article-related China RoHS declaration table can be found in the download area for the respective article under "Manufacturer declaration". For all articles with EFUP-E, no China RoHS declaration table issued and required.

EU REACH SVHC

REACH candidate substance (CAS No.)	Lead(CAS: 7439-92-1)
SCIP	33dfcaa0-7980-4a17-8884-332c9dcedcaf

EF3.1 Climate Change

CO2e kg	1.476 kg CO2e

Phoenix Contact 2026 © - all rights reserved
https://www.phoenixcontact.com

PHOENIX CONTACT Ltd
Halesfield 13, Telford
Shropshire, TF7 4PG
01952 681700
info@phoenixcontact.co.uk