PLD E 409 W 350 - LED enclosure light

1319569

https://www.phoenixcontact.com/gb/products/1319569

Please be informed that the data shown in this PDF document is generated from our online catalog. Please find the complete data in the user documentation. Our general terms of use for downloads are valid.



LED enclosure light, 24 V AC/DC ... 265 V AC/DC, length: 350 mm, degree of protection: IP20, can be swiveled (±90° swivel range), including mounting accessories

Product description

The LED light is designed to illuminate the interior of control cabinets. The prismatic integrated into the light cover ensures optimum illumination of the control cabinet. You can use magnets or screws to affix the light holder. The light can swivel in the holder. Connect the supply voltage to the light via Push-in connection. You do not require special connectors for this. You can connect several lights in succession. As soon as you have supplied the light with voltage, it is ready for operation and is in ON/OFF mode (delivery state) or in continuous ON mode. You can switch the light on or off or switch it to continuous ON mode via a button.

Your advantages

- Series connection reduces cabling effort for control cabinets arranged in series
- Optimum lighting of the control cabinet, thanks to integrated prismatics and capacity to swivel
- Wide range input 24 V AC/DC ... 265 V AC/DC
- Extended temperature range of -25°C ... +70°C (at 24 V DC)
- LED service life of 50,000 h (L70 value) prevents bulb replacement

Commercial data

Item number	1319569
Packing unit	1 pc
Minimum order quantity	1 pc
Sales key	DRL232
Product key	DRL232
GTIN	4063151602888
Weight per piece (including packing)	228 g
Weight per piece (excluding packing)	150 g
Customs tariff number	94054231
Country of origin	DE

Technical data

Notes

Note on application

Note on application	Only for industrial use

Product properties

Product type	Enclosure light
Application	Control cabinet
Mounting position	any
Special properties	can be swiveled (±90° swivel range)
	including mounting accessories
Socket type	No socket

Electrical properties

Supply: Module electronics

Connection method	Push-in connection
Number of positions	2
Supply voltage range	24 V AC/DC ... 265 V AC/DC (50/60 Hz (AC))
Current consumption	250 mA (24 V DC)
	28 mA (240 V / 50 Hz)
Power consumption	6 W

Connection data

Connection method	Push-in connection
Conductor cross-section, rigid	0.13 mm² ... 1.5 mm²
Conductor cross-section, flexible	0.13 mm² ... 1.5 mm²
Conductor cross-section AWG	24 ... 16
Conductor cross-section, flexible, with ferrule, with plastic sleeve	0.5 mm² ... 0.75 mm² (DIN 46228-4)
Conductor cross-section, flexible, with ferrule, without plastic sleeve	0.5 mm² ... 1.5 mm² (DIN 46228-1)
	0.5 mm² ... 1.5 mm² (DIN 46228-1)
Conductor cross-section, flexible, with ferrule, with plastic sleeve	0.5 mm² ... 0.75 mm² (DIN 46228-4)
Stripping length	10 mm

Signaling

Light properties

Source of light type	LED
Number of LEDs	18
Color temperature	5000 K
Color rendering index	85
Luminous flux	700 lm (Net luminous flux)
Illumination	max. 1200 lx (50 cm distance)

	max. 450 lx (Distance of 1 m)
Ordinance	Delegated Regulation (EU) 2019/2015
Energy efficiency class	D (1 light source)
Note	This product contains an energy efficiency class D light source.

Dimensions

Dimensional drawing	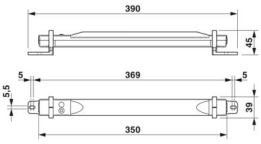
Width	39 mm
Height	45 mm
Length	390 mm

Material specifications

Color (Housing)	gray (RAL 7042)
Color	transparent
Material	Polycarbonate (Housing)

Environmental and real-life conditions

Ambient conditions

Ambient temperature (operation)	-25 °C ... 60 °C (Standard applications and applications with UL approval)
	-25 °C ... 70 °C (at 24 V DC)
Degree of protection	IP20
Ambient temperature (storage/transport)	-40 °C ... 85 °C
Permissible humidity (operation)	5 % ... 90 %
Permissible humidity (storage/transport)	5 % ... 90 %

Mechanical test

Vibration resistance in accordance with EN 60068-2-6/IEC 60068-2-6	5g
Shock in accordance with EN 60068-2-27/IEC 60068-2-27	25g
Continuous shock in accordance with EN 60068-2-27/IEC 60068-2-27	10g

Energy labeling

Ordinance	Delegated Regulation (EU) 2019/2015
Note (EPREL)	The EPREL entry can be searched for with the registration number (https://eprel.ec.europa.eu/screen/home)
	The EPREL entry can be searched for with the model ID (https://eprel.ec.europa.eu/screen/product/lightsources)

Energy labeling (Light source 1)

Registration number	1321528

Model ID	79 LEX POBPIL
Energy efficiency class	D
Number of light sources	1

Standards and regulations

Protection class	II

Mounting

Mounting type	Screw mounting
	Magnet mounting
Mounting position	any

Drawings

Dimensional drawing

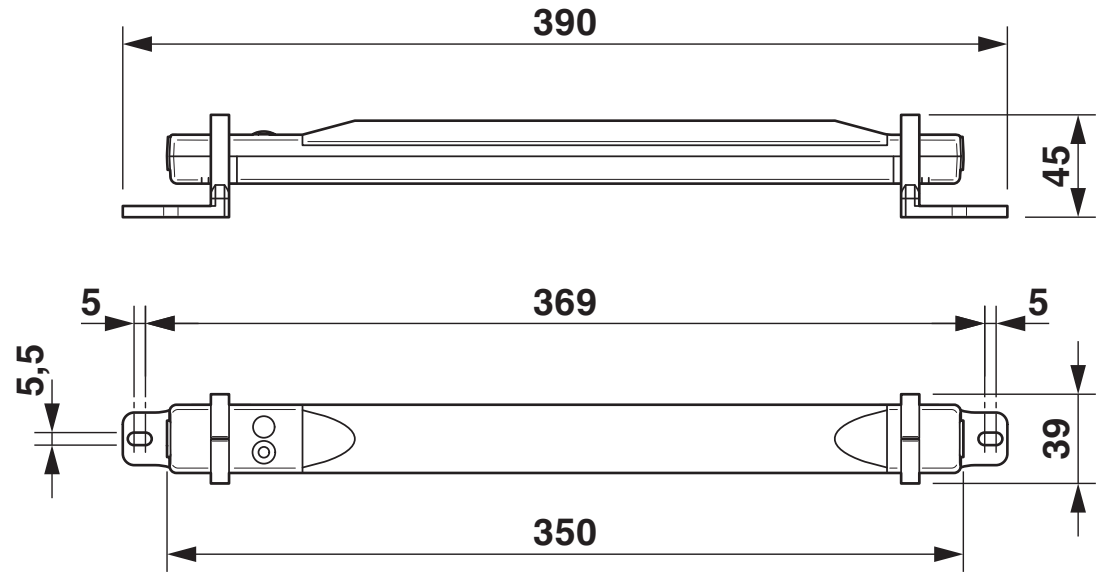

Dimensions (in mm)

Schematic diagram

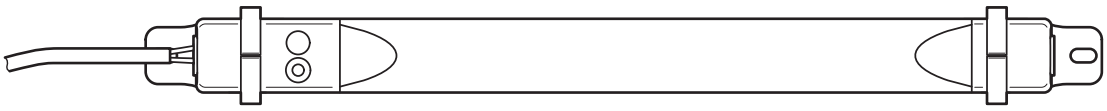

Connection of a light

Schematic diagram

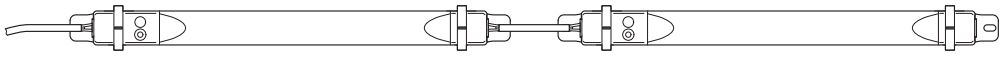

Series connection of two lights

Block diagram

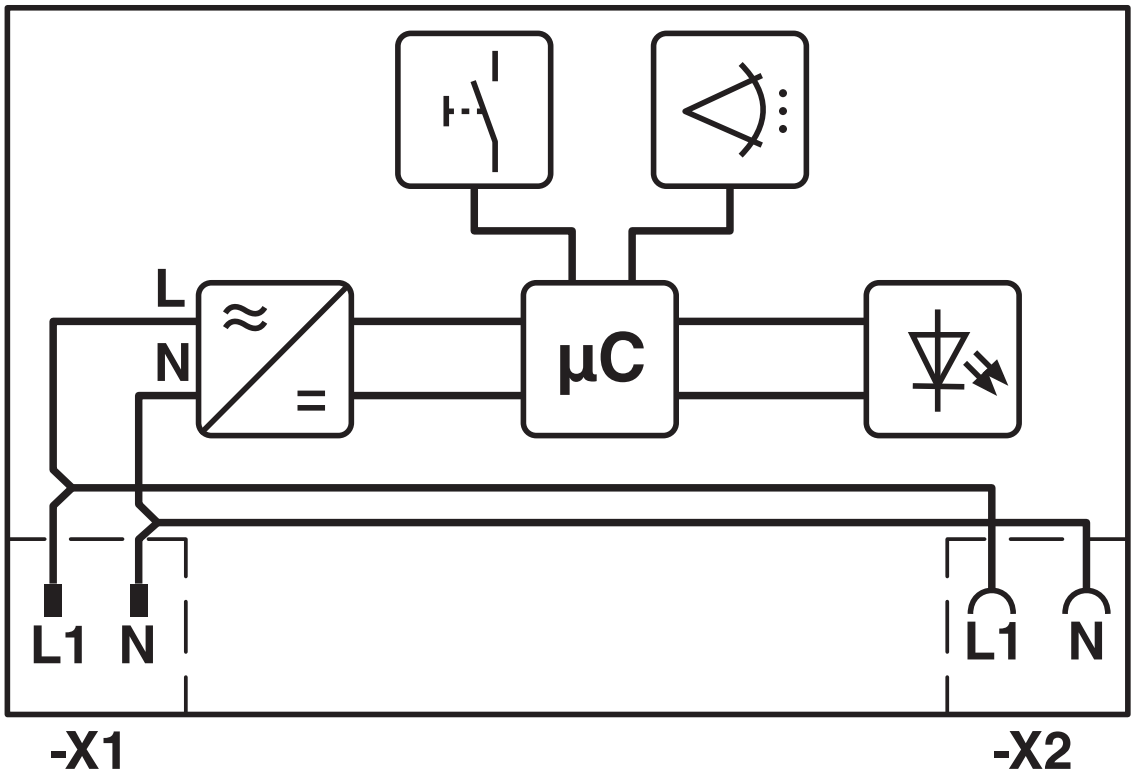

Internal wiring (motion detector only with PLD E 409 W 350 MS)

Approvals

To download certificates, visit the product detail page: https://www.phoenixcontact.com/gb/products/1319569

cULus Recognized
Approval ID: E255026

cULus Recognized
Approval ID: E255026

Classifications

ECLASS

ECLASS-13.0	27182808
ECLASS-15.0	27182808

ETIM

ETIM 10.0	EC000321

UNSPSC

UNSPSC 21.0	32151500

Environmental product compliance

EU RoHS

Fulfills EU RoHS substance requirements	Yes, No exemptions

China RoHS

Environment friendly use period (EFUP)	EFUP-E
	No hazardous substances above the limits

EU REACH SVHC

REACH candidate substance (CAS No.)	No substance above 0.1 wt%

EF3.1 Climate Change

CO2e kg	8.094 kg CO2e

Phoenix Contact 2026 © - all rights reserved
https://www.phoenixcontact.com

PHOENIX CONTACT Ltd
Halesfield 13, Telford
Shropshire, TF7 4PG
01952 681700
info@phoenixcontact.co.uk