PLD E 706 W 395 E - LED enclosure light

1319565

https://www.phoenixcontact.com/gb/products/1319565

Please be informed that the data shown in this PDF document is generated from our online catalog. Please find the complete data in the user documentation. Our general terms of use for downloads are valid.



LED enclosure light, 230 V AC, length: 395 mm, degree of protection: IP20, with motion detector, Socket type E (e.g., for France and Belgium), including mounting accessories

Product description

The LED light is designed to illuminate the interior of control cabinets. The integrated optics ensure optimum illumination of the control cabinet. You can connect several lights in succession. An integrated motion detector switches the light on and off.

Your advantages

- Integrated motion detector saves on MRP and installation costs for door position switches
- Socket enables the operation of external devices even when power is disconnected to the control cabinet
- Series connection reduces cabling effort for control cabinets arranged in series
- Optimum lighting of the control cabinet, thanks to integrated optics
- LED service life of 50,000 h (L70 value) prevents bulb replacement

Commercial data

Item number	1319565
Packing unit	1 pc
Minimum order quantity	1 pc
Sales key	DRL235
Product key	DRL235
GTIN	4063151605308
Weight per piece (including packing)	1,184.7 g
Weight per piece (excluding packing)	860 g
Customs tariff number	94054239
Country of origin	Information on the country of origin is provided with the delivery.

Technical data

Notes

Note on application

Note on application	Only for industrial use

Product properties

Product type	Enclosure light
Application	Control cabinet
Mounting position	any
For country-specific use in	France
	Belgium
	Poland
Special properties	with motion detector
	Socket type E (e.g., for France and Belgium)
	including mounting accessories
Socket type	Type E

Electrical properties

Supply: Module electronics

Connection method	Installation coupler
Number of positions	3
Supply voltage	230 V AC (50/60 Hz)
Current consumption	max. 16 A
Power consumption	13 W

Signaling

Motion detector

Detection range	max. 5 m
Detection angle	100 °
Lighting duration	5 min (Retriggered)

Light properties

Source of light type	LED
Number of LEDs	36
Color temperature	5700 K
Color rendering index	85
Luminous flux	1200 lm (Net luminous flux)
Illumination	max. 3300 lx (50 cm distance)
	max. 1040 lx (Distance of 1 m)
Ordinance	Delegated Regulation (EU) 2019/2015
Energy efficiency class	E (1 light source)

Note	This product contains an energy efficiency class E light source.

Dimensions

Dimensional drawing	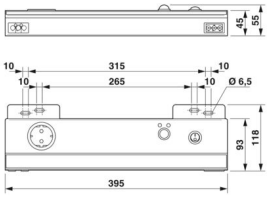
Width	118 mm
Height	55 mm
Length	395 mm

Material specifications

Material	Aluminum (Housing)

Environmental and real-life conditions

Ambient conditions

Ambient temperature (operation)	-25 °C ... 60 °C
Degree of protection	IP20
Ambient temperature (storage/transport)	-40 °C ... 85 °C
Permissible humidity (operation)	5 % ... 90 %
Permissible humidity (storage/transport)	5 % ... 90 %

Mechanical test

Vibration resistance in accordance with EN 60068-2-6/IEC 60068-2-6	5g
Shock in accordance with EN 60068-2-27/IEC 60068-2-27	25g
Continuous shock in accordance with EN 60068-2-27/IEC 60068-2-27	10g

Standards and regulations

Protection class	I

Mounting

Mounting type	Screw mounting
	Snap-on assembly
Mounting position	any

Drawings

Dimensional drawing

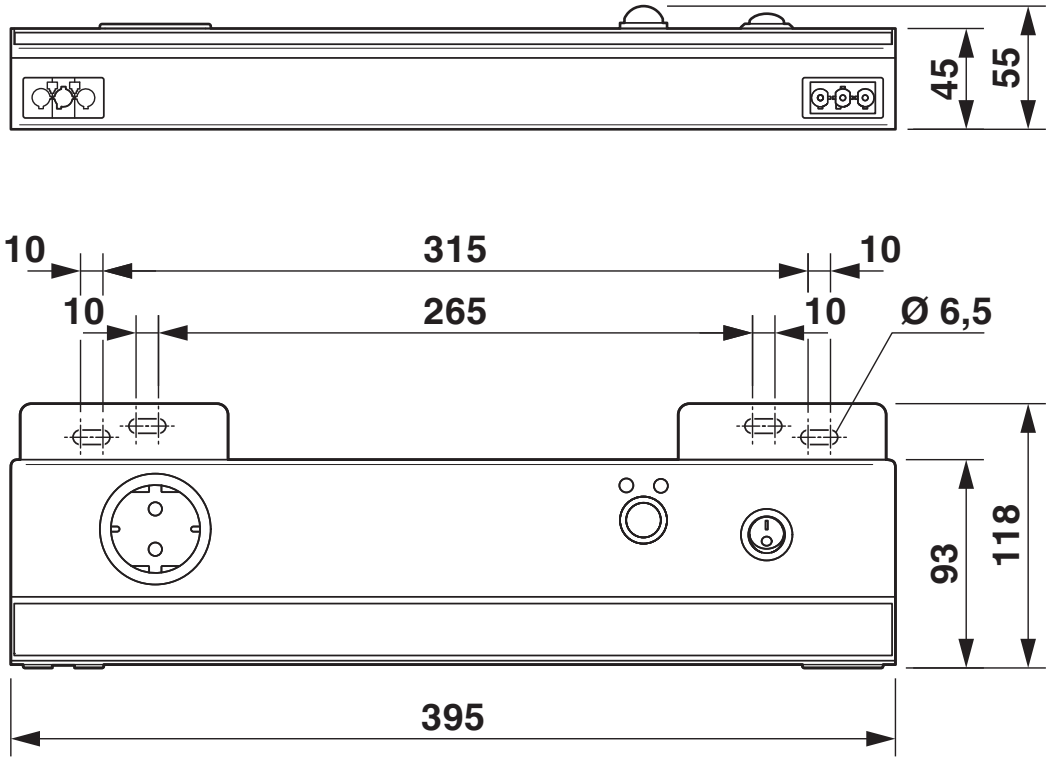

Dimensional drawing

Schematic diagram

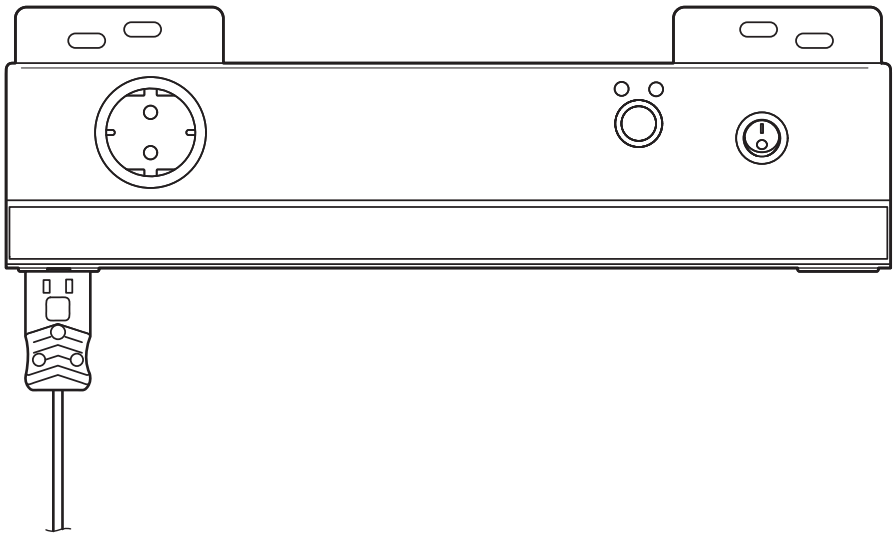

Connection of a light

Schematic diagram

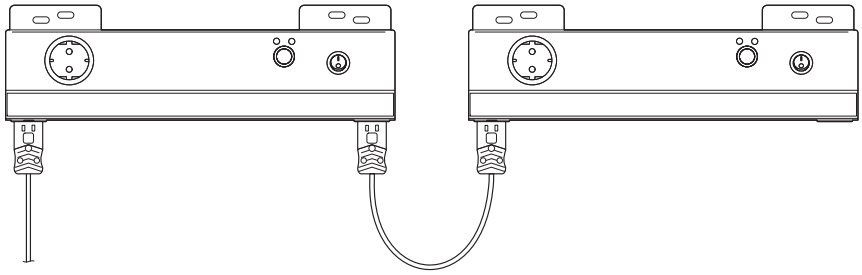

Series connection of two lights

Schematic diagram

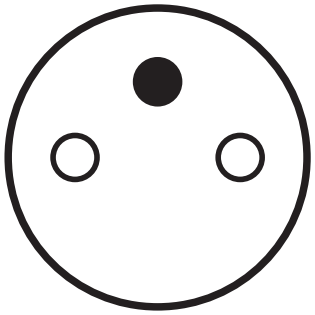

Type E socket

Classifications

ECLASS

ECLASS-13.0	27182808
ECLASS-15.0	27182808

ETIM

ETIM 10.0	EC000321

UNSPSC

UNSPSC 21.0	32151500

Environmental product compliance

EU RoHS

Fulfills EU RoHS substance requirements	Yes, No exemptions

China RoHS

Environment friendly use period (EFUP)	EFUP-E
	No hazardous substances above the limits

EU REACH SVHC

REACH candidate substance (CAS No.)	No substance above 0.1 wt%

Phoenix Contact 2026 © - all rights reserved
https://www.phoenixcontact.com

PHOENIX CONTACT Ltd
Halesfield 13, Telford
Shropshire, TF7 4PG
01952 681700
info@phoenixcontact.co.uk