PLD E 400-DS-3,0/0,6 - Door position switch

1318672

https://www.phoenixcontact.com/gb/products/1318672

Please be informed that the data shown in this PDF document is generated from our online catalog. Please find the complete data in the user documentation. Our general terms of use for downloads are valid.



Door position switch with 3 m cable with open cable end and 0.6 m cable with open cable end, including mounting accessories

Product description

This door position switch is used to automatically switch the class 400 PLD enclosure lights on and off when opening and closing the control cabinet door. If the enclosure lights are connected in series, you can use this door position switch at any chosen position upstream of the first light or between two lights.

Commercial data

Item number	1318672
Packing unit	1 pc
Minimum order quantity	1 pc
Sales key	DRL23Z
Product key	DRL23Z
GTIN	4063151601829
Weight per piece (including packing)	330 g
Weight per piece (excluding packing)	320 g
Customs tariff number	85365080
Country of origin	DE

Technical data

Notes

Note on application

Note on application	Only for industrial use

Product properties

Product type	Door position switch

Insulation characteristics: Device class (built-in switch)

Overvoltage category	II (EN 60947-1)
Protection class	II (protective insulation)
Pollution degree	3 (Built-in switch)

Electrical properties

Short-circuit current	400 A (conditional rated short-circuit current)
Protective circuit	Short-circuit protection; Fuse, 4 A gG

Device class (built-in switch)

Rated surge voltage	4 kV

Contact information

Contact switching type	1 N/C contact
Contact material	Ag
Positive opening action	in accordance with EN 60947-5-1, Annex K, actuation force: 18 N
Rated insulation voltage U_i	250 V
Thermal continuous current I_{th}	5 A
Voltage	max. (see load limit current)
Current	min. 1 mA
	max. (see load limit current)
Mechanical service life	10x 10^6 cycles
Resistance	max. 25 mΩ (Contact resistance in new condition)
Bouncing time	< 3 ms

Load limit current in accordance with IEC/EN 60947-5-1

Standard	IEC/EN 60947-5-1
Utilization category	AC15
Rated operating voltage U_e	240 V (50/60 Hz)
Rated operating current I_e	3 A
Utilization category	DC13
Rated operating voltage U_e	24 V
Rated operating current I_e	1.5 A

Dimensions

Dimensional drawing	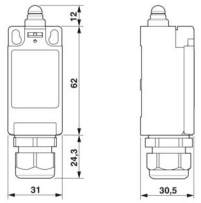
Width	31 mm
Height	30.5 mm
Depth	98.3 mm

Material specifications

Color (Housing)	black (RAL 9005)
Flammability rating according to UL 94	V0
Housing material	Thermoplastic, fiberglass-reinforced

Environmental and real-life conditions

Ambient conditions

Degree of protection	IP67, in acc. to IEC 60529 (only applies with closed cover)
Ambient temperature (operation)	-30 °C ... 75 °C
Ambient temperature (storage/transport)	-40 °C ... 80 °C
Permissible humidity (operation)	5 % ... 90 %
Permissible humidity (storage/transport)	5 % ... 90 %

Standards and regulations

Device class (built-in switch)

Standards/regulations	IEC 60947-1
Standard designation	Category E (MC3+CC2+SC1)

Mounting

Mounting position	any

Drawings

Dimensional drawing

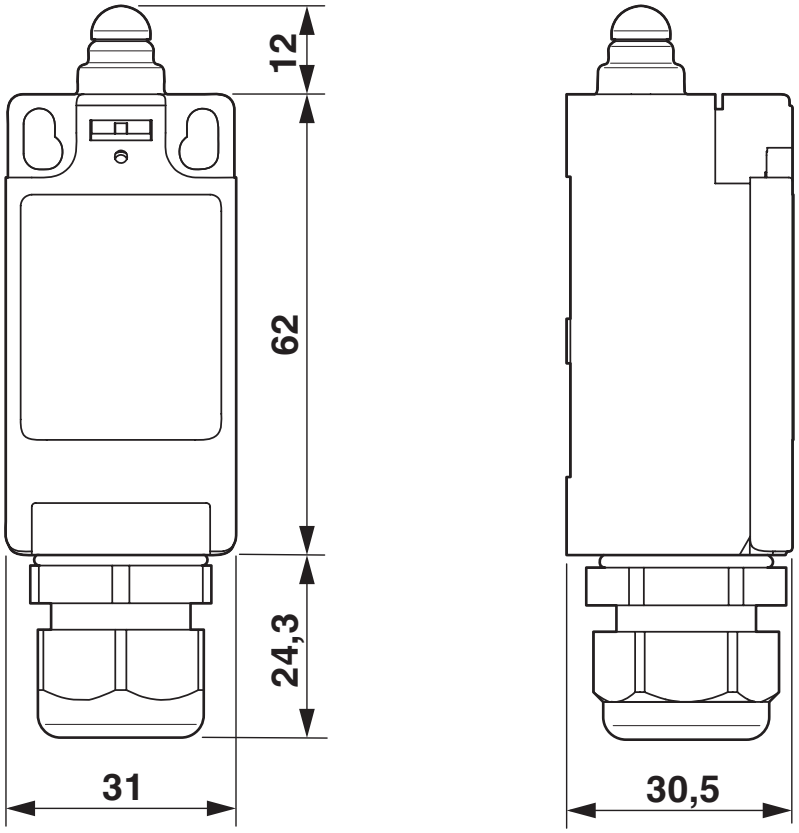

Dimensions

Circuit diagram

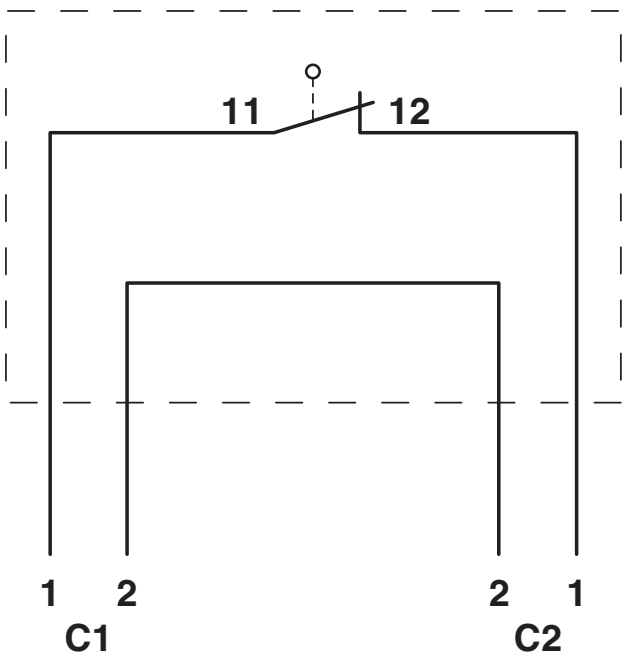

Approvals

To download certificates, visit the product detail page: https://www.phoenixcontact.com/gb/products/1318672

UL Listed
Approval ID: E140324

cUL Listed
Approval ID: E140324

Classifications

ECLASS

ECLASS-15.0	27111126
ECLASS-13.0	27111126

ETIM

ETIM 10.0	EC002557

UNSPSC

UNSPSC 21.0	39111500

Environmental product compliance

EU RoHS

Fulfills EU RoHS substance requirements	Yes, No exemptions

China RoHS

Environment friendly use period (EFUP)	EFUP-E
	No hazardous substances above the limits

EU REACH SVHC

REACH candidate substance (CAS No.)	No substance above 0.1 wt%

EF3.1 Climate Change

CO2e kg	3.886 kg CO2e

Phoenix Contact 2026 © - all rights reserved
https://www.phoenixcontact.com

PHOENIX CONTACT Ltd
Halesfield 13, Telford
Shropshire, TF7 4PG
01952 681700
info@phoenixcontact.co.uk