AXL SE AI4 I 0-20 - Analog module

1296378

https://www.phoenixcontact.com/gb/products/1296378

Please be informed that the data shown in this PDF document is generated from our online catalog. Please find the complete data in the user documentation. Our general terms of use for downloads are valid.

CRA-READY



Axioline Smart Elements, Analog input module, Analog inputs: 4, 0 mA ... 20 mA, connection technology: 2-conductor, degree of protection: IP20; The product is being prepared for compliance with the Cyber Resilience Act (CRA).

Product description

You can integrate Axioline Smart Elements into systems with the Smart Element interface. This Smart Element detects analog current signals.

Your advantages

- 4 analog input channels
- Connection of sensors in 2-conductor technology
- Current range: 0 mA ... 20 mA
- Data format: standardized representation
- Resolution: 12 bits
- Device rating plate stored

ELEKTROGERÄTE RÜCKNAHME

Commercial data

Item number	1296378
Packing unit	1 pc

Minimum order quantity	1 pc
Sales key	DRIB41
Product key	DRIB41
GTIN	4063151534301
Weight per piece (including packing)	36.8 g
Weight per piece (excluding packing)	34.17 g
Customs tariff number	85389091
Country of origin	DE

Technical data

Dimensions

Dimensional drawing	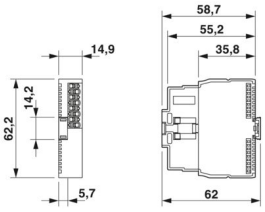
Width	14.9 mm
Height	62.2 mm
Depth	62 mm

Notes

Note on application	Only for industrial use
Note on application	As things stand now, we are preparing the product so that, as of December 11, 2027, it will comply with the requirements of the EU Cyber Resilience Act (CRA) based on the information currently available regarding the CRA.

Mounting

Mounting type	Plug-in mounting (Smart Element slot)
Mounting position	See the system in which the Smart Element is used.

Material specifications

Color (Housing)	gray (RAL 7042)

Interfaces

Smart Element interface

Number of interfaces	1
Connection method	Card edge connector
Start time until ready to operate	< 1000 ms

System properties

Programming data

Process data channel	64 bit
Input address area	8 Byte
Output address area	0 Byte

Fieldbus data telegram (PROFIBUS)

Required parameter data	15 Byte
Required configuration data	6 Byte

Input data

Analog:

Input name	Analog inputs
Description of the input	Single-ended inputs, current
Number of inputs	4
Connection method	Push-in technology
Connection technology	2-conductor
Note regarding the connection technology	shielded, twisted pair
Process data update	typ. 1 ms
A/D conversion time	2 µs
A/D converter resolution	12 bit
Permissible voltage	max. 2.5 V
Protective circuit	Transient protection
Measured value representation	16 bits
Data formats	Standardized representation
Current input signal	0 mA ... 20 mA
Input resistance current input	max. 60 Ω
Tolerance, relative	typ. 0.1 % (of measuring range end value)
	max. 0.3 % (of measuring range end value)
Drift	max. 75 ppm/K

Product properties

Product type	I/O component
Product family	Axioline Smart Elements
Type	modular
Mounting position	See the system in which the Smart Element is used.
Special properties	The product is being prepared for compliance with the Cyber Resilience Act (CRA)

Insulation characteristics

Overvoltage category	II (IEC 60664-1, EN 60664-1)
Pollution degree	2 (IEC 60664-1, EN 60664-1)

Electrical properties

Maximum power dissipation for nominal condition	0.75 W

Potentials: Communications power supply of the Smart Elements (U_{SE})

Supply voltage	using card edge connectors

Potentials: I/O supply (U_P)

Supply voltage	24 V DC (using card edge connectors)
Supply voltage range	19.2 V DC ... 30 V DC (including all tolerances, including ripple)
Current draw	max. 20 mA
	typ. 15 mA
Current consumption	min. 12 mA (without connected peripherals)
Protective circuit	Surge protection; See the system in which the Smart Element is used.

	Reverse polarity protection; Polarity protection diode
Protection	See the system in which the Smart Element is used.

Electrical isolation/isolation of the voltage ranges

Test voltage: Communications supply / 24 V supply (I/O)	500 V AC, 50 Hz, 1 min
Test voltage: Communications supply / functional ground	500 V AC, 50 Hz, 1 min
Test voltage: 24 V supply (I/O) / functional ground	500 V AC, 50 Hz, 1 min

Connection data

Connection technology

Connection name	I/O
Note on the connection method	Please observe the information provided on conductor cross-sections in the “Axioline Smart Elements” user manual.

I/O

Connection method	Push-in connection
Note on the connection method	Please observe the information provided on conductor cross-sections in the “Axioline Smart Elements” user manual.
Conductor cross-section, rigid	0.25 mm² ... 1.5 mm²
Conductor cross-section, flexible	0.25 mm² ... 1.5 mm²
Conductor cross-section AWG	24 ... 16
Conductor cross-section, flexible, with ferrule, with plastic sleeve	0.25 mm² ... 1.5 mm²
Conductor cross-section, flexible, with ferrule, without plastic sleeve	0.25 mm² ... 1.5 mm²
	0.25 mm² ... 1.5 mm²
Conductor cross-section, flexible, with ferrule, with plastic sleeve	0.25 mm² ... 1.5 mm²
Stripping length	8 mm

Environmental and real-life conditions

Ambient conditions

Ambient temperature (operation)	-25 °C ... 60 °C
Degree of protection	IP20
Air pressure (operation)	70 kPa ... 106 kPa (up to 3000 m above sea level)
Air pressure (storage/transport)	70 kPa ... 106 kPa (up to 3000 m above sea level)
Ambient temperature (storage/transport)	-40 °C ... 85 °C
Permissible humidity (operation)	5 % ... 95 % (non-condensing)
Permissible humidity (storage/transport)	5 % ... 95 % (non-condensing)

Mechanical test

Vibration resistance in accordance with EN 60068-2-6/IEC 60068-2-6	5g
Shock in accordance with EN 60068-2-27/IEC 60068-2-27	30g
Continuous shock in accordance with EN 60068-2-27/IEC 60068-2-27	10g

Standards and regulations

Protection class	III (IEC 61140, EN 61140, VDE 0140-1)

Drawings

Dimensional drawing

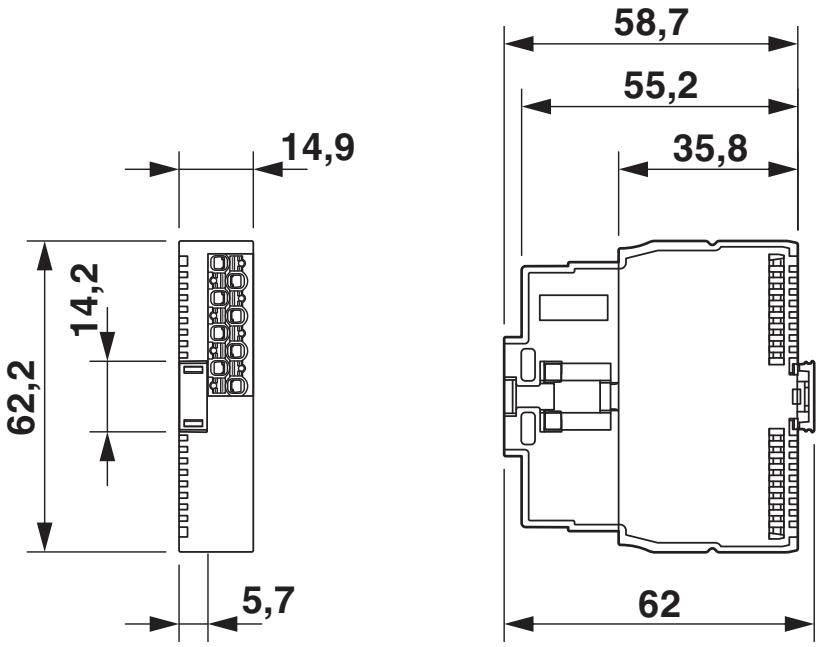

Dimensions

Connection diagram

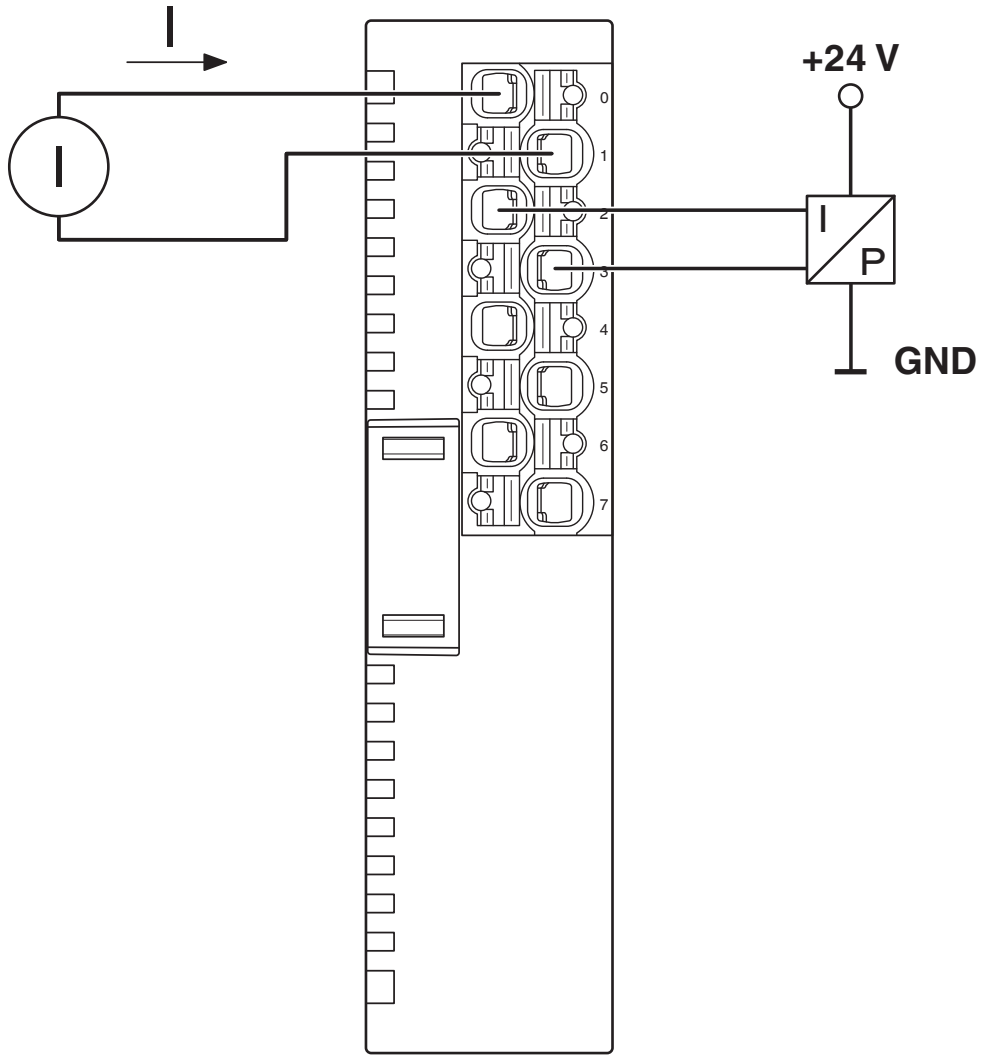

Connection example

Block diagram

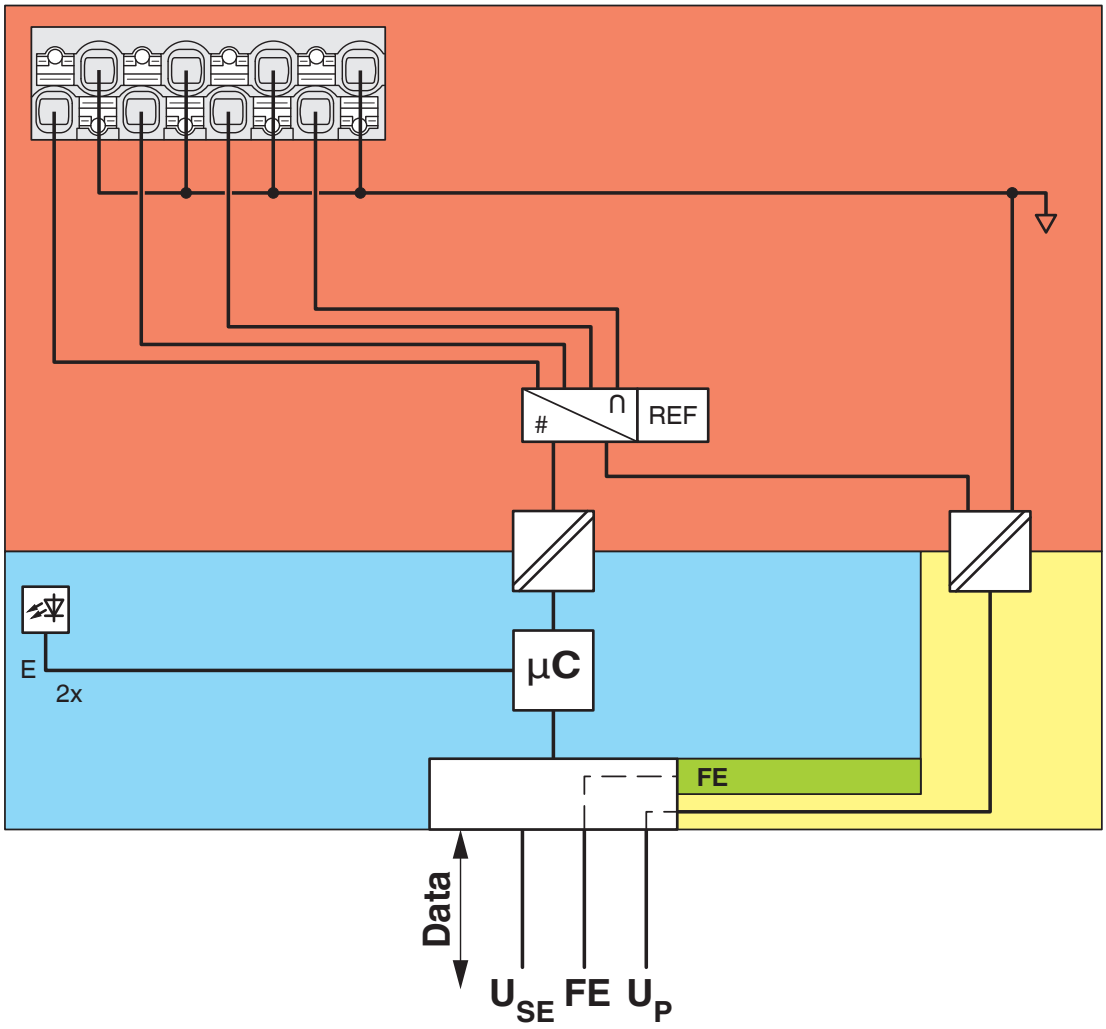

Internal wiring of the terminal points

Approvals

To download certificates, visit the product detail page: https://www.phoenixcontact.com/gb/products/1296378

cULus Listed
Approval ID: E238705

cULus Listed
Approval ID: E238705

Classifications

ECLASS

ECLASS-13.0	27242601
ECLASS-15.0	27242601

ETIM

ETIM 10.0	EC001596

UNSPSC

UNSPSC 21.0	32151600

Environmental product compliance

EU RoHS

Fulfills EU RoHS substance requirements	Yes
Exemption	7(a), 7(c)-I, 7(c)-II

China RoHS

Environment friendly use period (EFUP)	EFUP-E
	No hazardous substances above the limits

EU REACH SVHC

REACH candidate substance (CAS No.)	Lead(CAS: 7439-92-1)
SCIP	f78590c4-4a28-4f16-8001-ed92cf0c1bb6

EF3.1 Climate Change

CO2e kg	2.801 kg CO2e

Phoenix Contact 2026 © - all rights reserved
https://www.phoenixcontact.com

PHOENIX CONTACT Ltd
Halesfield 13, Telford
Shropshire, TF7 4PG
01952 681700
info@phoenixcontact.co.uk