AXL E IOL RTD4 M12 3M - Temperature module

1293247

https://www.phoenixcontact.com/gb/products/1293247

Please be informed that the data shown in this PDF document is generated from our online catalog. Please find the complete data in the user documentation. Our general terms of use for downloads are valid.

CRA-READY



Axioline E, Temperature measurement device, Analog inputs: 4, connection technology: 2-, 3-, 4-conductor (shielded), IO-Link, degree of protection: IP65/IP67/IP69; The product is being prepared for compliance with the Cyber Resilience Act (CRA).

Product description

You can connect this Axioline E device to an IO-Link master via an IO-Link A port. You can use this device to acquire signals from resistance temperature detectors. The device supports platinum sensors in accordance with DIN EN 60751. Use within different networks is possible via the IO-Link master.

Your advantages

- Connection to an IO-Link master with M12 connector (A-coded, 4-pos.)
- Type A port
- IO-Link specification V1.1.3
- 4 analog input channels for connecting resistance temperature detectors (RTDs)
- Connection of sensors in 2-, 3-, and 4-conductor technology
- Diagnostic and status indicators
- Device rating plate stored
- IP65/IP67/IP69 degree of protection

Commercial data

Item number	1293247
Packing unit	1 pc
Minimum order quantity	1 pc
Sales key	DRI7MF
Product key	DRI7MF
GTIN	4063151527969
Weight per piece (including packing)	300 g
Weight per piece (excluding packing)	286 g
Customs tariff number	85176200

Country of origin	DE

Technical data

Dimensions

Dimensional drawing	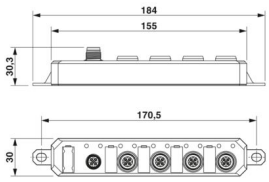
Width	30 mm
Height	184 mm
Depth	30.3 mm

Notes

Note on application	Only for industrial use
Note on application	As things stand now, we are preparing the product so that, as of December 11, 2027, it will comply with the requirements of the EU Cyber Resilience Act (CRA) based on the information currently available regarding the CRA.

Mounting

Mounting type	Screw mounting

Material specifications

Color (Housing)	zinc color
Housing material	Die-cast zinc

Input data

Analog:

Input name	Analog inputs
Description of the input	Inputs for resistive temperature sensors
Number of inputs	4
Connection method	M12 connector, A-coded
Note on the connection method	Push-pull fast connection according to IEC 61076-2-010 or screw connection according to IEC 61076-2-101
Connection technology	2-, 3-, 4-conductor (shielded)
A/D converter resolution	24 bit
Sensor types (RTD) that can be used	Pt sensors
Tolerance, relative	see tables for tolerance values
Tolerance, absolute	see tables for tolerance values
Data formats	Standardized representation
Measured value representation	16 bits (15 bits + sign bit)
Input filter time	120 ms
Nominal value of the current sources	1 mA (Pt 100; pulsed current, the data is valid during the sampling phase)

	210 µA (Pt 1000; pulsed current, the data is valid during the sampling phase)
Differential non-linearity	typ. 1 ppm / ±0.0001 % (in all ranges)
Integral non-linearity	typ. 30 ppm / ±0.003 % (Pt 100)
Protective circuit	Transient protection
	Surge protection (35 V for 0.5 s)

IO-Link

Number of ports	1
Connection method	M12 connector, A-coded
Note on the connection method	Push-pull fast connection according to IEC 61076-2-010 or screw connection according to IEC 61076-2-101
Connection technology	3-conductor
Port type	Class A
Specification	V1.1.3
Reverse polarity protection	yes
Transmission speed	230.4 kbps (COM3)
Cycle Time	2 ms
Amount of process data	8 Byte (Input data)
	0 Byte (Output data)

Product properties

Product type	I/O component
Product family	Axioline E
Type	Stand-alone
Special properties	The product is being prepared for compliance with the Cyber Resilience Act (CRA)
	IO-Link

Insulation characteristics

Overvoltage category	II (IEC 60664-1, EN 60664-1)
Pollution degree	2 (IEC 60664-1, EN 60664-1)

Electrical properties

Supply: IO-Link

Designation	IO-Link port supply (L+)
Nominal voltage for I/O supply	24 V DC (Provided via the IO-Link interface of the IO-Link master.)
Supply voltage range	18 V DC ... 30 V DC (including all tolerances, including ripple)
Nominal current per device	approx. 35 mA
Current consumption	max. 50 mA (device dependent; observe the current of the IO-Link master that is made available via L+)
Protective circuit	Reverse polarity protection; yes

Electrical isolation/isolation of the voltage ranges

Test voltage: 24 V supply L+ (IO-Link)/functional ground	500 V AC, 50 Hz, 1 min

Test voltage: 24 V supply L+ (IO-Link)/analog inputs	500 V AC, 50 Hz, 1 min
Test voltage: Analog inputs / functional ground	500 V AC, 50 Hz, 1 min

Connection data

Connection method	M12 connector
Tightening torque	0.4 Nm

Environmental and real-life conditions

Ambient conditions

Ambient temperature (operation)	-25 °C ... 70 °C
Degree of protection	IP65/IP67/IP69
	IK08 (Impact resistance level)
Air pressure (operation)	70 kPa ... 108 kPa (up to 3000 m above sea level)
Air pressure (storage/transport)	66 kPa ... 108 kPa (up to 3000 m above sea level)
Ambient temperature (storage/transport)	-25 °C ... 85 °C
Permissible humidity (storage/transport)	75 % (non-condensing)

Mechanical test

Vibration resistance in accordance with EN 60068-2-6/IEC 60068-2-6	5g
Shock in accordance with EN 60068-2-27/IEC 60068-2-27	30g
Continuous shock in accordance with EN 60068-2-27/IEC 60068-2-27	10g

Test (noxious gas)

Test standard	IEC 60068-2-60:2015 Method 4
Temperature	25 °C ±1 K
Humidity (relative)	75 % ±3 %
Test duration	14 Days
Volume concentration H_2S (Hydrogen sulfide)	10 ppb ±5 ppb
Volume concentration NO_2 (Nitrogen dioxide)	200 ppb ±20 ppb
Volume concentration Cl_2 (Chlorine)	10 ppb ±5 ppb
Volume concentration SO_2 (Sulfur dioxide)	200 ppb ±20 ppb

Test (Salt spray)

Test standard	DIN EN 60068-2-52
Number of cycles	4
Test steps per cycle	2
Test duration (Total)	168 h
Test step (Salt mist)	2 h with 5 % ±0.5 % NaCl, pH value 6.5...7.2 for 35 °C ±2 K
Test step (Humidity)	166 h with 93 % ±3 % Humidity for 40 °C ±2 K

Standards and regulations

Protection class	III (IEC 61140, EN 61140, VDE 0140-1)

Drawings

Dimensional drawing

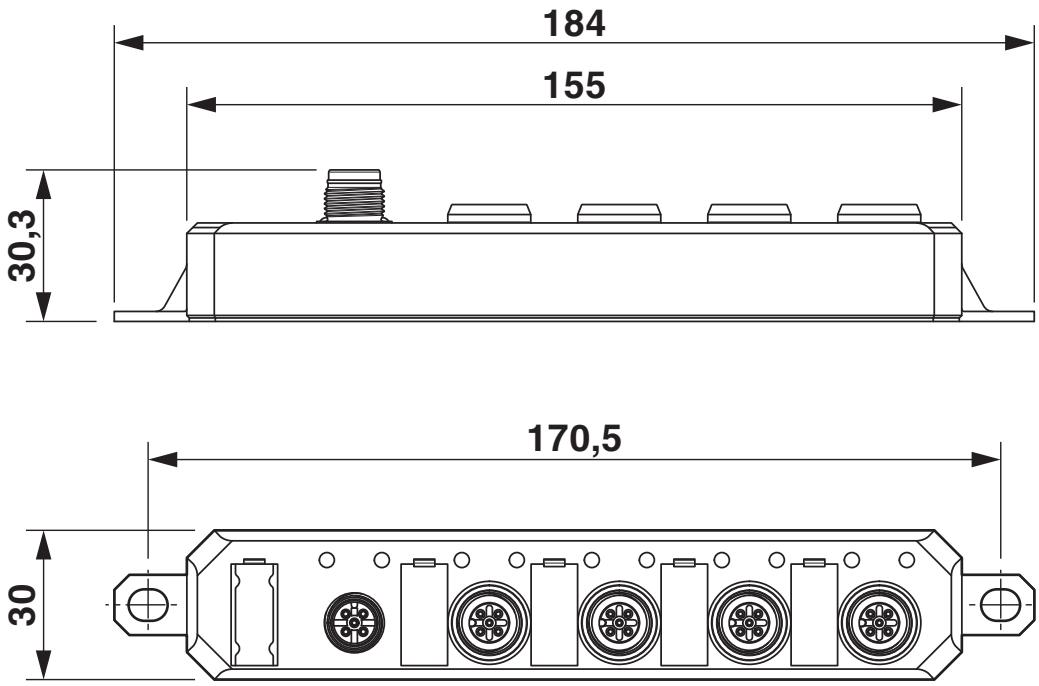

Dimensions (in mm)

Connection diagram

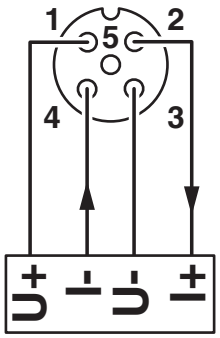

Connection example: 4-conductor connection

Connection diagram

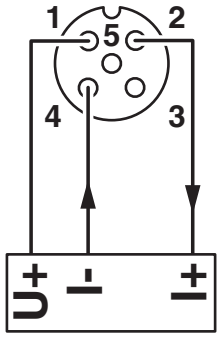

Connection example: 3-conductor connection

Connection diagram

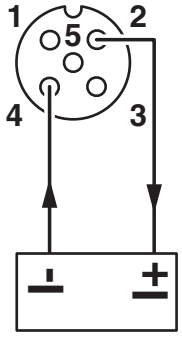

Connection example: 2-conductor connection

Block diagram

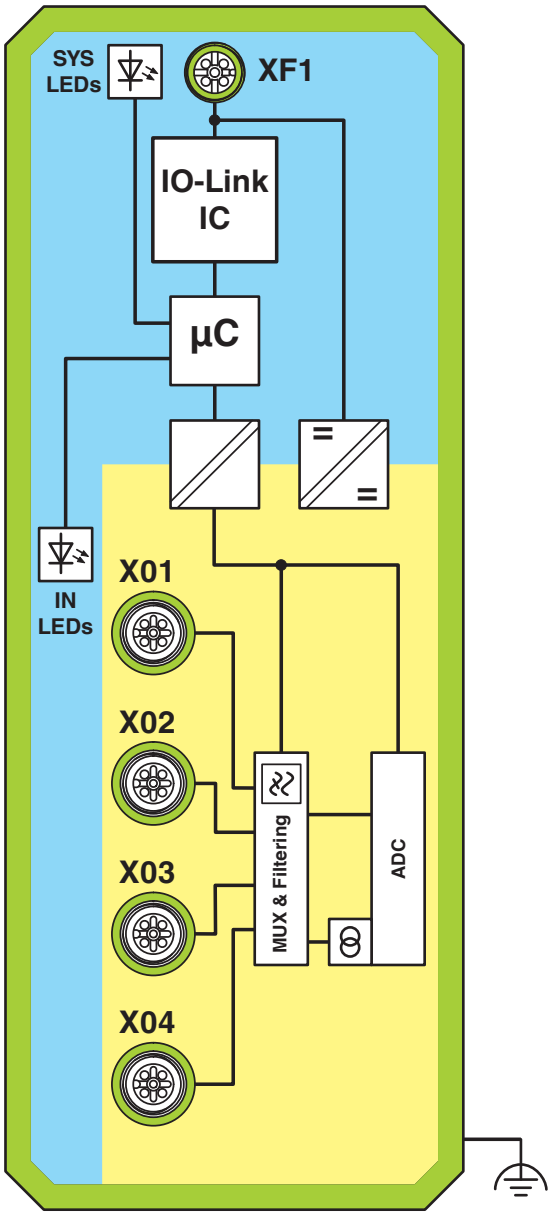

Basic circuit diagram

Approvals

To download certificates, visit the product detail page: https://www.phoenixcontact.com/gb/products/1293247

UL Listed
Approval ID: E238705

cUL Listed
Approval ID: E238705

cULus Listed
Approval ID: E238705

Classifications

ECLASS

ECLASS-13.0	27242601
ECLASS-15.0	27242601

ETIM

ETIM 10.0	EC001596

UNSPSC

UNSPSC 21.0	32151600

Environmental product compliance

EU RoHS

Fulfills EU RoHS substance requirements	Yes
Exemption	7(a), 7(c)-I

China RoHS

Environment friendly use period (EFUP)	EFUP-50
	An article-related China RoHS declaration table can be found in the download area for the respective article under "Manufacturer declaration". For all articles with EFUP-E, no China RoHS declaration table issued and required.

EU REACH SVHC

REACH candidate substance (CAS No.)	Lead(CAS: 7439-92-1)
SCIP	a961ae2e-df76-40c7-b832-ee251bd5516b

Phoenix Contact 2026 © - all rights reserved
https://www.phoenixcontact.com

PHOENIX CONTACT Ltd
Halesfield 13, Telford
Shropshire, TF7 4PG
01952 681700
info@phoenixcontact.co.uk