FIL-1S-1-1A-230AC-PT - EMC filter

1292328

https://www.phoenixcontact.com/gb/products/1292328

Please be informed that the data shown in this PDF document is generated from our online catalog. Please find the complete data in the user documentation. Our general terms of use for downloads are valid.





EMC filter (mains filter) for single-phase AC and DC systems (nominal voltage: up to 230 V AC, up to 220 V DC), for mounting on NS 35, nominal current: 1 A

Your advantages

- Reliable protection of sensitive equipment against high-frequency conducted interference
- Effective attenuation with current-coupled coils and X and Y capacitors
- Versatile in use with universal circuit design
- Improved filter effect with additional PE terminals, for connection to the local protective bonding
- User-friendly handling thanks to easy assembly and installation with Push-in connection technology (PT)

ELEKTROGERÄTE RÜCKNAHME

Commercial data

Item number	1292328
Packing unit	1 pc
Minimum order quantity	1 pc
Sales key	CLC151
Product key	CLC151
GTIN	4063151525033

Weight per piece (including packing)	163.6 g
Weight per piece (excluding packing)	163.6 g
Customs tariff number	85480090
Country of origin	CN

Technical data

Product properties

Product type	EMC filters
Type	DIN rail module, one-piece
Number of positions	2

Electrical properties

Nominal frequency f_N	50 Hz (60 Hz)
Nominal voltage U_N	230 V AC (TN-S/TT)
	230 V AC (IT, L-L)
	120 V AC (TN-S/TT)
	120 V AC (IT, L-L)
	220 V DC
Rated voltage (U_R)	250 V AC
	250 V DC

Connection data

Connection method	Push-in connection
Conductor cross-section flexible	0.2 mm² ... 2.5 mm²
Conductor cross-section rigid	0.2 mm² ... 2.5 mm²
Conductor cross-section AWG	24 ... 14 (flexible)
	24 ... 12 (solid)

Dimensions

Dimensional drawing	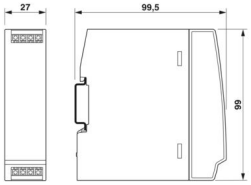
Width	27 mm
Height	99 mm
Depth	99.5 mm

Material specifications

Color	gray (RAL 7042)
	light gray (RAL 7035)
Flammability rating according to UL 94	V-0
Housing material	PC-GF10

Mechanical properties

Mechanical data

Open side panel	No

Protective circuit

Nominal voltage U_N	230 V AC (TN-S/TT)
	230 V AC (IT, L-L)
	120 V AC (TN-S/TT)
	120 V AC (IT, L-L)
	220 V DC
Nominal frequency f_N	50 Hz (60 Hz)
Rated current	1 A (50 °C)
Protective conductor current I_{PE}	≤ 0.2 mA
Input attenuation aE, sym.	> 65 dB (50 Ω / 1 MHz)
Input attenuation aE, asym.	> 45 dB (50 Ω / 1 MHz)
Capacity	2x 100 nF (X2)
	2x 2.2 nF (Y2)
Inductivity in series	2x 5.6 mH (with current compensation)
Short-circuit current rating I_{SCCR}	10 kA AC
	6 kA DC
Max. required back-up fuse	1 A AC/DC (FF, gR, Class J)
	1 A AC (MCB B)
	1 A AC (MCB, UL 489 Tripping Curve Z or B)
	1 A AC (MCB, CSA C22.2 No. 5-02 Tripping Curve Z or B)

Filter data

Discharge resistance	940 kΩ

Environmental and real-life conditions

Ambient conditions

Degree of protection	IP20
Ambient temperature (operation)	-40 °C ... 70 °C (dependent on the derating curve)
Ambient temperature (storage/transport)	-40 °C ... 70 °C
Ambient temperature (assembly)	-5 °C ... 70 °C
Altitude	≤ 2000 m (amsl)
Permissible humidity (operation)	5 % ... 95 %
Shock (operation)	15g (Half-sine / 11 ms / 3x ±X, ±Y, ±Z)
Vibration (operation)	DNVGL-CG-0339 class A

Standards and regulations

Standards/specifications	IEC 60939-1
Standards/specifications	EN 60939-1
Standards/specifications	IEC 60939-2
Standards/specifications	EN 60939-2
Standards/specifications	UL 60939-3
Standards/specifications	UL 1283

Standards/specifications	UL 121201
Standards/specifications	CSA C22.2 No. 8-13
Standards/specifications	CSA C22.2 No. 213-17

Mounting

Mounting type	DIN rail: 35 mm

Drawings

Dimensional drawing

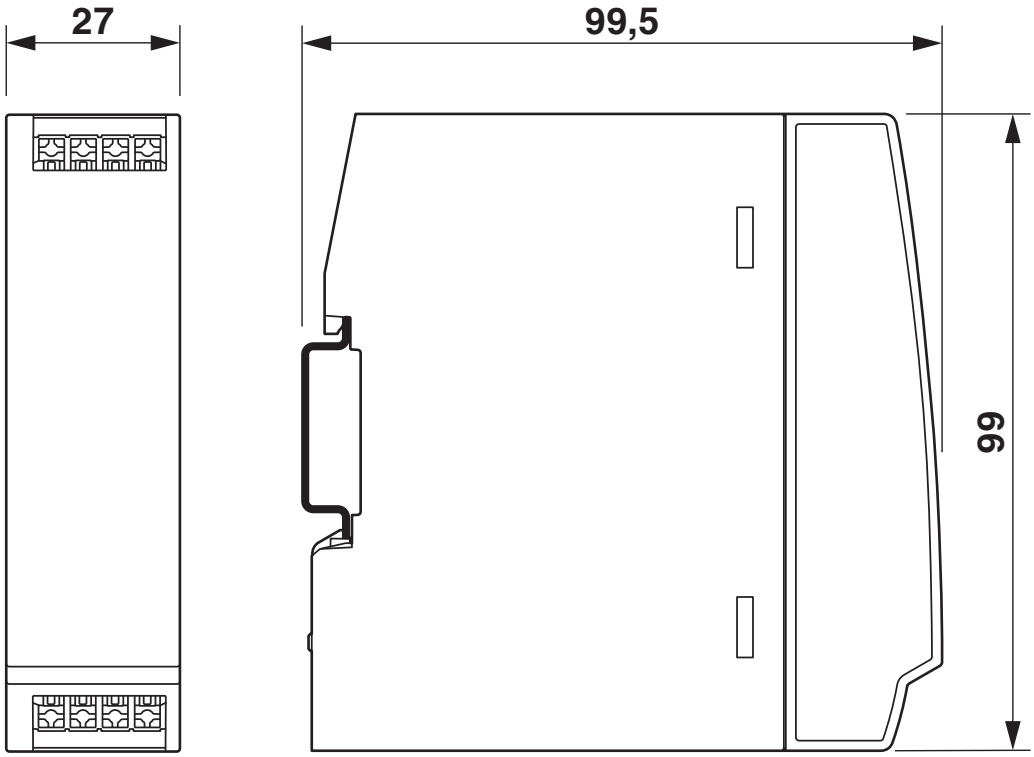

Diagram

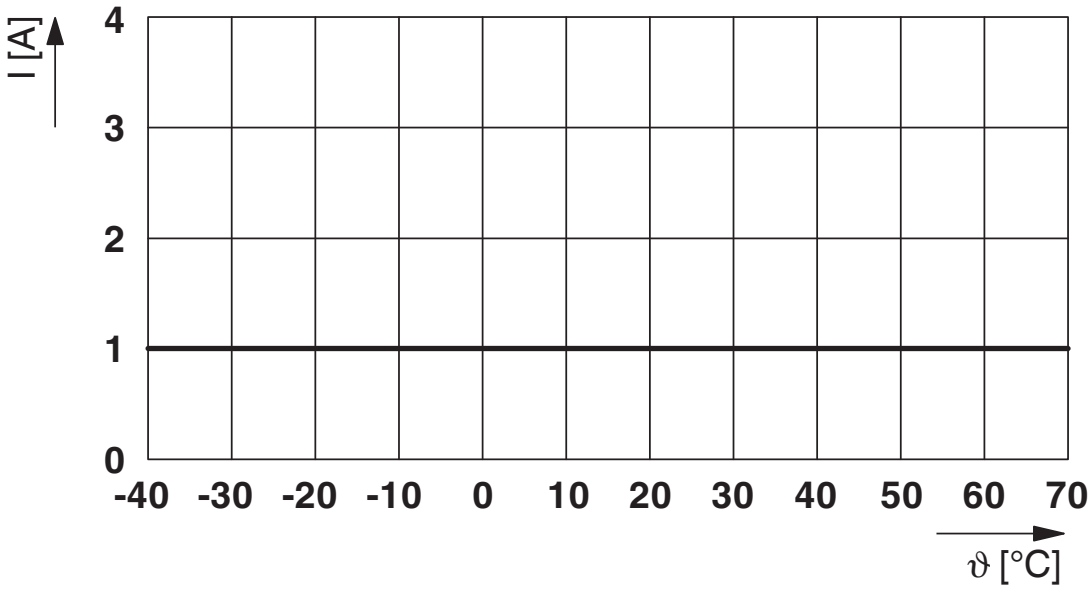

Diagram

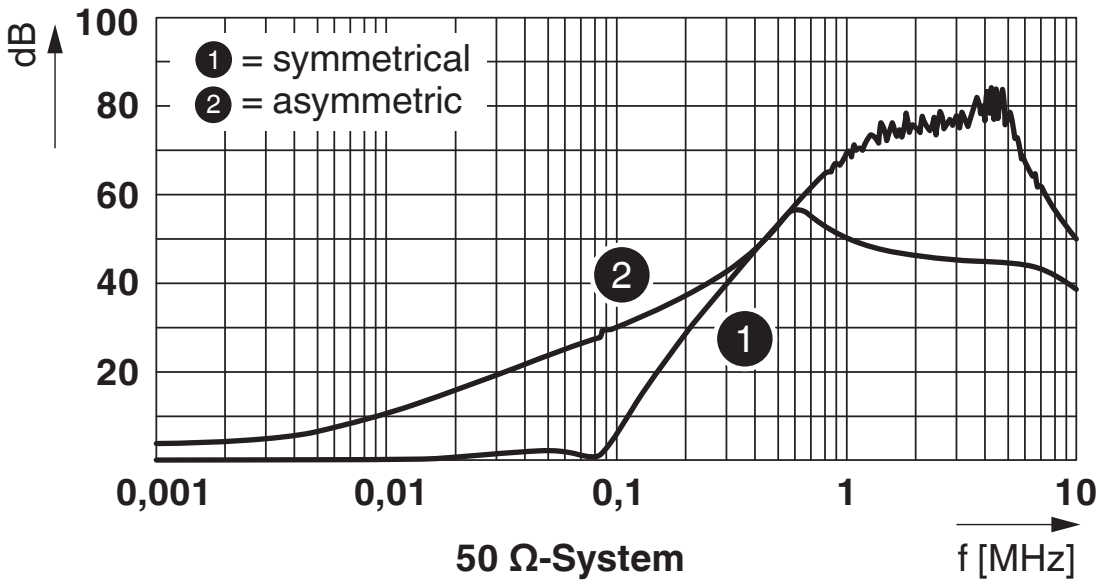

Circuit diagram

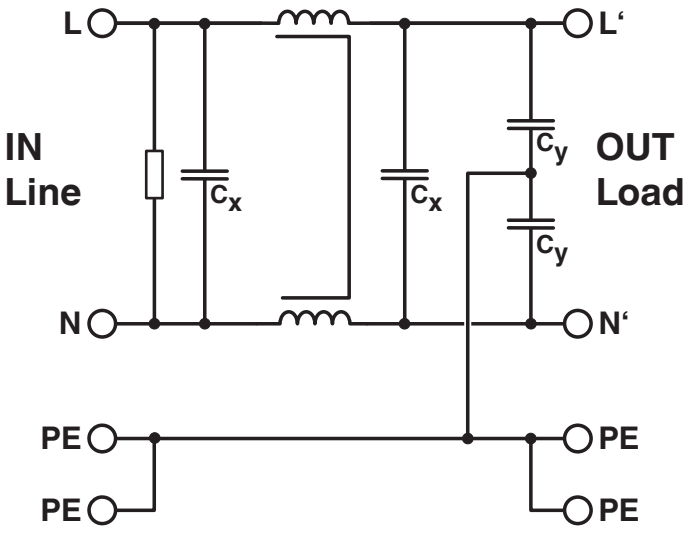

Approvals

To download certificates, visit the product detail page: https://www.phoenixcontact.com/gb/products/1292328

cUL Recognized
Approval ID: FILE E 526585

UL Recognized
Approval ID: FILE E 526585

IECEE CB Scheme
Approval ID: DE1-66248

VDE Zeichengenehmigung
Approval ID: 40054877

CCA
Approval ID: DE1-34877-A1

DNV GL
Approval ID: TAA0000384

cUL Recognized
Approval ID: FILE E 532830

UL Recognized
Approval ID: FILE E 532830

Classifications

ECLASS

ECLASS-13.0	27420208
ECLASS-15.0	27420290

ETIM

ETIM 10.0	EC002564

UNSPSC

UNSPSC 21.0	39121500

Environmental product compliance

EU RoHS

Fulfills EU RoHS substance requirements	Yes, No exemptions

China RoHS

Environment friendly use period (EFUP)	EFUP-E
	No hazardous substances above the limits

EU REACH SVHC

REACH candidate substance (CAS No.)	No substance above 0.1 wt%

Phoenix Contact 2026 © - all rights reserved
https://www.phoenixcontact.com

PHOENIX CONTACT Ltd
Halesfield 13, Telford
Shropshire, TF7 4PG
01952 681700
info@phoenixcontact.co.uk