MACX MCR-EX-AP-2T-2I-SP - Temperature measuring transducer

1290849

https://www.phoenixcontact.com/gb/products/1290849

Please be informed that the data shown in this PDF document is generated from our online catalog. Please find the complete data in the user documentation. Our general terms of use for downloads are valid.



Ex i-Temperature transducer, input signals from resistance thermometers in 2, 3, or 4-conductor technology, thermocouples, and mV sources are converted into active 0 mA / 4 mA ... 20 mA non Ex i signals. number of channels: 2, Standard configuration, 5-way isolation, Push-in connection

Commercial data

Item number	1290849
Packing unit	1 pc
Minimum order quantity	1 pc
Sales key	DK121W
Product key	DK121W
GTIN	4063151523077
Weight per piece (including packing)	220.5 g
Weight per piece (excluding packing)	133.1 g
Customs tariff number	85437090
Country of origin	DE

Technical data

Notes

Note on application	Accuracy, typically specified as a percentage of the basic measuring range at U_N, 23°C
Notes on operation	Installation conditions influence the ambient temperature. Please refer to the operating instructions.
Notes on operation	Output behavior = 2.4 mA (0 mA ... 23 mA or “Hold last value” can be configured)
Notes on operation	Sensor set via software or DIP switches
Notes on operation	2-conductor comparison set via DIP switch ADJ
Note on application	The input variables can be set via the ISpac Wizard parameterization software or DIP switches.

Product properties

Product type	Temperature transmitter
Product family	MACX Analog
No. of channels	2
Configuration	Software

System properties

Functionality

Configuration	Software

Electrical properties

Electrical isolation	5-way isolation
Electrical isolation between input and output	yes
Temperature coefficient, typical	≤ 0.1 % (10 K)
Reverse polarity protection	yes

Electrical isolation Input/output IEC/EN 60079-11

Standards/regulations	IEC/EN 60079-11
Rated insulation voltage	375 V_{PP}

Electrical isolation Input/power supply IEC/EN 60079-11

Standards/regulations	IEC/EN 60079-11
Rated insulation voltage	375 V_{PP}

Electrical isolation Input/fault monitoring output IEC/EN 60079-11

Standards/regulations	IEC/EN 60079-11
Rated insulation voltage	375 V_{PP}

Electrical isolation Input/configuration interface IEC/EN 60079-11

Standards/regulations	IEC/EN 60079-11
Rated insulation voltage	375 V_{PP}

Electrical isolation Output 1/output 2

Test voltage	350 V (50 Hz, 60 s)

Electrical isolation Output/supply

Test voltage	350 V (50 Hz, 60 s)

Electrical isolation Output/configuration interface

Test voltage	350 V (50 Hz, 60 s)

Electrical isolation Output/supply/fault monitoring output

Test voltage	350 V (50 Hz, 60 s)

Supply

Nominal supply voltage	24 V DC
Supply voltage range	18 V ... 31.2 V
Power dissipation	≤ 1.9 W
Power consumption	≤ 1.9 W

Input data

Measurement

Description of the input	Resistance thermometer
Sensor types (RTD) that can be used	Pt 100, Pt 250, Pt 500, Pt 1000, Pt 2000, Ni 100, Ni 500, Ni 1000, M50, M53, M100
Temperature measuring range	-200 °C ... 1100 °C (Range depending on the sensor type)
Connection technology	2-, 3-, 4-conductor
Max. permissible overall conductor resistance	50 Ω (per wire, 2-conductor circuit)
	100 Ω (per wire, 3-, 4-conductor circuit)
Temperature measuring range	≥ 51 K (Range depending on the sensor type)

Measurement

Description of the input	Thermocouple
Sensor types that can be used (TC)	B, E, J, K, N, R, S, T, L, U, XK
Temperature measuring range	-200 °C ... 1800 °C (Range depending on the sensor type)
Max. permissible overall conductor resistance	≤ 1000 Ω (per wire)
Temperature measuring range	≥ 36 K (Range depending on the sensor type)

Measurement

Description of the input	Potentiometer
Connection technology	3-conductor
Linear resistance measuring range	50 Ω ... 500 Ω
	0.5 kΩ ... 5 kΩ
	1 kΩ ... 10 kΩ
	10 kΩ ... 100 kΩ (with parallel 10 kΩ shunt, no wire-break monitoring)

Output data

Signal: Fault monitoring output

Maximum switching voltage	30 V
Max. switching current	100 mA

Signal: Current

Current output signal	0 mA ... 20 mA (configurable)
	4 mA ... 20 mA (configurable)
	0 mA ... 21 mA (Function area)
Load	0 Ω ... 600 Ω (per channel)

Connection data

Connection method	Push-in connection
Stripping length	8 mm
Conductor cross-section rigid	0.2 mm² ... 1.5 mm²
Conductor cross-section flexible	0.2 mm² ... 1.5 mm²
Conductor cross-section AWG	24 ... 16

Ex data

Ex installation (EPL)	Gc
Ex i circuits (EPL)	[Ga]
	[Da]
	[Ma]

Safety data

Max. internal inductance L_i	negligible
Max. internal capacitance C_i	negligible
Max. output voltage U_o	6.5 V
Max. output current I_o	19.7 mA
Max. output power P_o	32 mW (linear characteristic curve)
Safety-related maximum voltage U_m	253 V AC
IIA (simple circuit): Max. external inductivity L_o / Max. external capacitance C_o	700 mH / 1000 µF
IIB (simple circuit): Max. external inductivity L_o / Max. external capacitance C_o	330 mH / 570 µF
IIC (simple circuit): Max. external inductivity L_o / Max. external capacitance C_o	90 mH / 25 µF
I (simple circuit): Max. external inductivity L_o / Max. external capacitance C_o	700 mH / 1000 µF

Interfaces

Designation	Configuration interface
Note	Note on application All device functions and diagnostics
Connection method	4-pos. socket

Type	RS-232-C
Software	ISpac Wizard 9199

Signaling

Status display	Green LED (supply voltage)
	Red LED (line errors)

Dimensions

Dimensional drawing	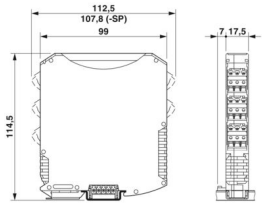
Width	17.5 mm
Height	107.8 mm
Depth	113.7 mm
Depth NS 35/7,5	114.5 mm (Snapped onto DIN rail NS 35/7,5 in accordance with EN 60715)

Material specifications

Flammability rating according to UL 94	V0
Housing material	PA 6.6

Environmental and real-life conditions

Ambient conditions

Degree of protection	IP20 (Terminal blocks)
	IP30 (Housing)
Ambient temperature (operation)	-20 °C ... 70 °C (Stand-alone device: any mounting position)
	-20 °C ... 40 °C (Group assembly: vertical DIN rail without circulating air)
	-20 °C ... 60 °C (Group assembly: vertical DIN rail with circulating air)
	-20 °C ... 50 °C (Group assembly: horizontal DIN rail without circulating air)
	-20 °C ... 70 °C (Group assembly: horizontal DIN rail with circulating air)
Ambient temperature (storage/transport)	-40 °C ... 80 °C
Altitude	≤ 2000 m
Permissible humidity (operation)	≤ 95 % (non-condensing)

Approvals

ATEX

Identification	Ⓔx II (1) G [Ex ia Ga] IIC
	Ⓔx II (1) D [Ex ia Da] IIIC
	Ⓔx II 3 (1) G Ex nA nC [ia Ga] IIC T4 Gc
	Ⓔx I (M1) [Ex ia Ma] I

IECEx

Identification	[Ex ia Ga] IIC
	[Ex ia Da] IIIC
	Ex nA nC [ia Ga] IIC T4 Gc
	[Ex ia Ma] I

EMC data

Electromagnetic compatibility	Tested in accordance with the following standards and regulations: EN 61326-1 For industrial use, NAMUR NE 21

Standards and regulations

Electrical isolation	5-way isolation

Mounting

Mounting type	NS 35/15, NS 35/7,5
Mounting position	vertical, horizontal

Drawings

Dimensional drawing

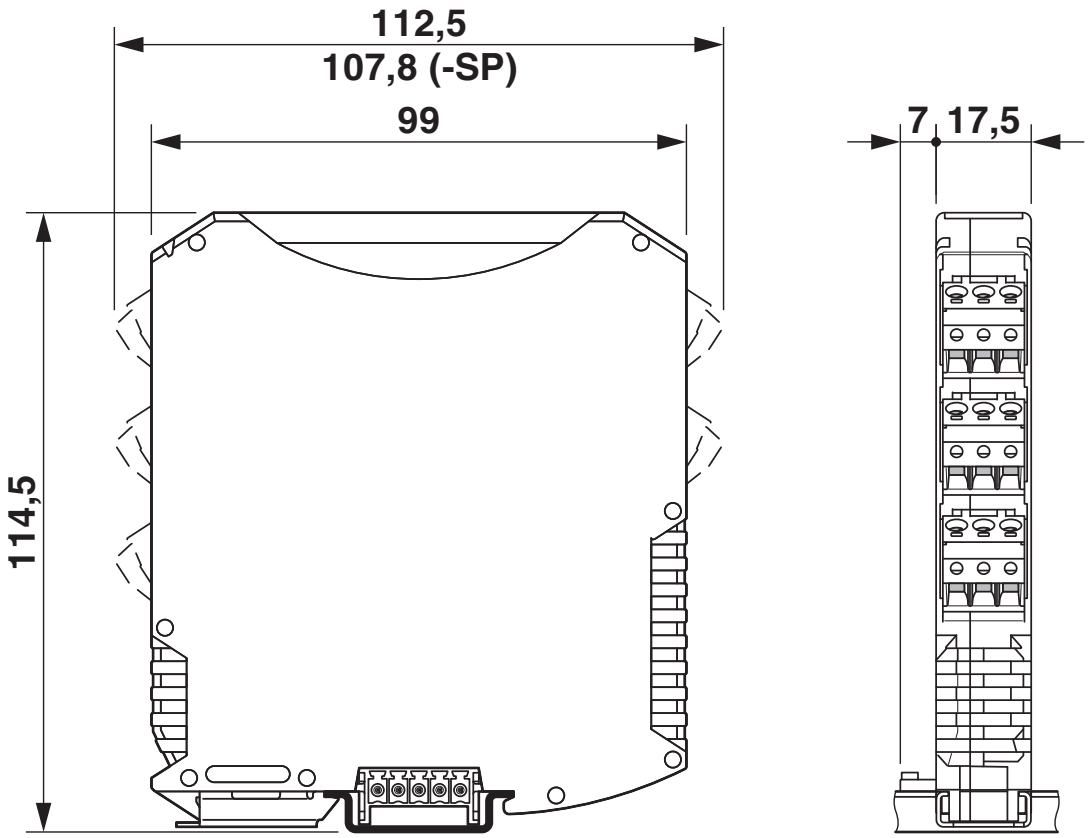

Block diagram

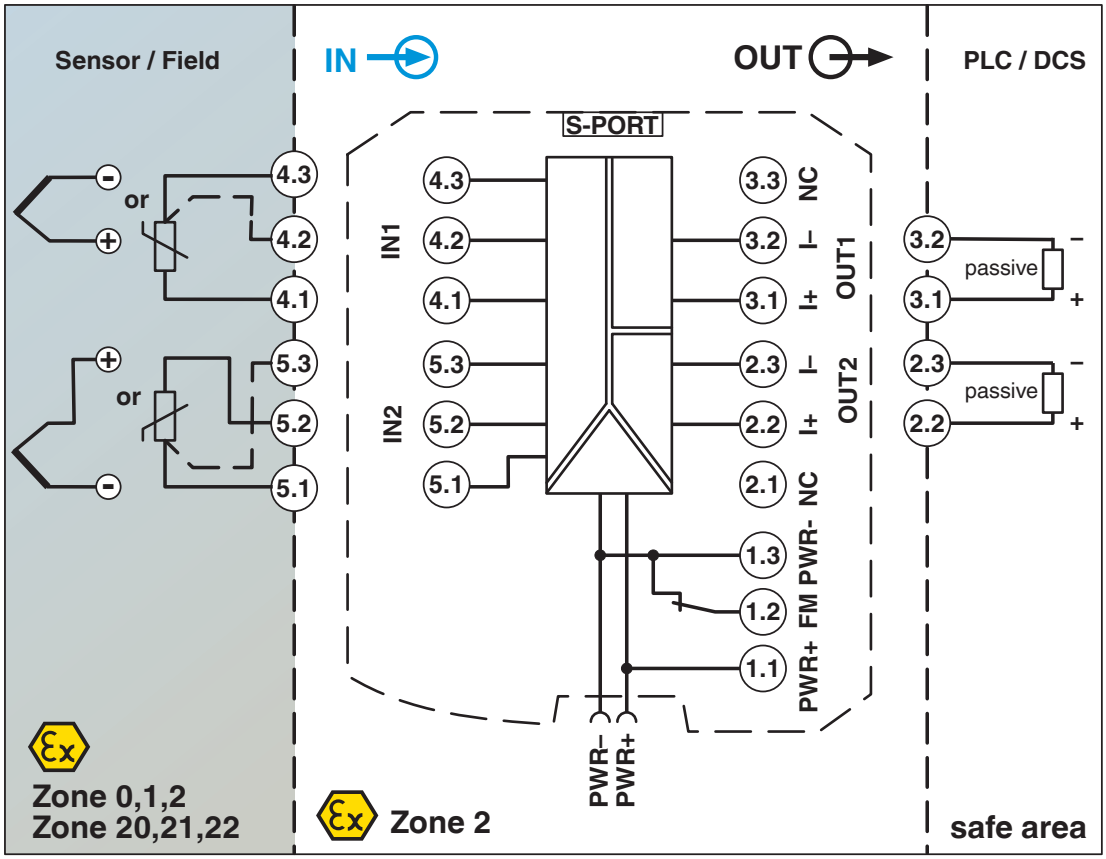

Approvals

To download certificates, visit the product detail page: https://www.phoenixcontact.com/gb/products/1290849

IECEx
Approval ID: IECEx BVS 21.0035X

ATEX
Approval ID: BVS 21 ATEX E 033X

Classifications

ECLASS

ECLASS-13.0	27210129
ECLASS-15.0	27210129

ETIM

ETIM 10.0	EC002919

UNSPSC

UNSPSC 21.0	41112100

Environmental product compliance

EU RoHS

Fulfills EU RoHS substance requirements	Yes
Exemption	6(c), 7(a), 7(c)-I

China RoHS

Environment friendly use period (EFUP)	EFUP-50
	An article-related China RoHS declaration table can be found in the download area for the respective article under "Manufacturer declaration". For all articles with EFUP-E, no China RoHS declaration table issued and required.

EU REACH SVHC

REACH candidate substance (CAS No.)	Lead titanium zirconium oxide(CAS: 12626-81-2)
	Lead(CAS: 7439-92-1)
SCIP	1d9c4574-f017-434a-b95c-e8665fc27c3b

Phoenix Contact 2026 © - all rights reserved
https://www.phoenixcontact.com

PHOENIX CONTACT Ltd
Halesfield 13, Telford
Shropshire, TF7 4PG
01952 681700
info@phoenixcontact.co.uk