TRIO-PS67/1AC/24DC/3.75/INC - Power supply

1278302

https://www.phoenixcontact.com/gb/products/1278302

Please be informed that the data shown in this PDF document is generated from our online catalog. Please find the complete data in the user documentation. Our general terms of use for downloads are valid.



Primary-switched power supply unit TRIO POWER IP67, 7/8″ circular connector, Panel mounting, input: 1-phase, output: 24 V DC / 3.75 A

Product description

TRIO POWER 3.75 A power supplies with IP67 degree of protection for power-limited circuits offer increased safety thanks to NEC Class 2 classification. The field power supplies are equipped with basic functionality and ensure that the maximum output power of 100 W is not exceeded even in the event of a fault.

Your advantages

- Increased electrical safety with NEC Class 2
- Safe installation with 7/8″ circular connectors
- Direct installation at the load in the field reduces cable lengths and saves space in the control cabinet
- Reliable use with high shock resistance, vibration resistance, and electric strength
- Robust die-cast aluminum housing with IP67 degree of protection ensures reliable protection against dust and water

ELEKTROGERÄTE RÜCKNAHME

Commercial data

Item number	1278302
Packing unit	1 pc
Minimum order quantity	1 pc
Sales key	CMPF13
Product key	CMPF13
GTIN	4063151476014
Weight per piece (including packing)	958 g

Weight per piece (excluding packing)	725 g
Customs tariff number	85044095
Country of origin	VN

Technical data

Input data

AC operation

Supply system configuration	Star network (TN, TT, IT (PE))
Nominal input voltage range	100 V AC ... 277 V AC
Input voltage range	100 V AC ... 277 V AC -15 % ... +10 %
	115 V AC ... 277 V AC ±10 % (UL)
Derating	< 100 V AC ... 85 V AC (1 %/V)
Switch-on voltage	≥ 80 V AC
Shut-down voltage	< 75 V AC
Typical national grid voltage	120 V AC
	230 V AC
Voltage type of supply voltage	AC
Inrush current	≤ 35 A (typical, 277 V AC)
	17 A (typical, 120 V AC)
Inrush current integral (I^2t)	< 0.45 A^2s
AC frequency range	50 Hz ... 60 Hz ±10 %
Frequency range (f_N)	50 Hz ... 60 Hz ±10 %
Mains buffering time	> 25 ms (120 V AC)
	> 25 ms (230 V AC)
Current consumption	1 A (100 V AC)
	0.4 A (277 V AC)
Protective circuit	Transient surge protection; Varistor
Power factor	> 0.92
Switch-on time	< 0.2 s
Input fuse	4 A (internal (device protection))
Recommended breaker for input protection	6 A ... 16 A (US/CAN: branch circuit protection ≤ ⎍ A) (Characteristic B, C, D, K or comparable)
Discharge current to PE	< 0.5 mA

DC operation

Nominal input voltage range	110 V DC ... 250 V DC
Input voltage range	110 V DC ... 250 V DC -20 % ... +10 %
	120 V DC ... 250 V DC ±10 % (UL)
Derating	< 110 V DC ... 88 V DC (1 %/V)
Switch-on voltage	≥ 75 V DC
Shut-down voltage	< 70 V DC
Voltage type of supply voltage	DC
Current consumption	0.88 A (110 V DC)
	0.38 A (250 V DC)

Output data

Efficiency	typ. 93 % (120 V AC)
	typ. 94 % (230 V AC)
Nominal output voltage	24 V DC ±2 % (SELV)
Nominal output current (I_N)	3.75 A (NEC Class 2 Output)
Derating	> 60 °C ... 70 °C (2.0 %/K)
Feedback voltage resistance	≤ 35 V DC
Protection against overvoltage at the output (OVP)	≤ 35 V DC
Control deviation	< 1 % (change in load, static 10 % ... 90 %)
	< 3 % (Dynamic load change 10 % ... 90 %, 10 Hz)
	< 0.1 % (change in input voltage ±10 %)
Residual ripple	≤ 10 mV_{PP}
Short-circuit-proof	yes
No-load proof	yes
Output power	90 W
Peak switching voltages nominal load	< 100 mV
Maximum no-load power dissipation	< 0.25 W (120 V AC)
	< 0.28 W (230 V AC)
Power loss nominal load max.	< 7.4 W (120 V AC)
	< 6 W (230 V AC)
Rise time	typ. 100 ms (U_{OUT} (10 % ... 90 %))
Connection in parallel	yes, for increasing power and redundancy with diode
Connection in series	yes, for increased output voltage
Fuse protection (secondary side)	electronic

Signal: DC OK

Continuous load current	100 mA

Connection data

Input

Connection method	7/8″ circular connector
Type of locking	Screw locking mechanism
Number of positions	3

Output

Connection method	7/8″ circular connector
Type of locking	Screw locking mechanism
Number of positions	4

Signaling

Types of signaling	LED
Status display	2 x LED (green)

Signal output: LED status indicator

Signalization designation	AC OK
Status display	LED

Color	green
AC OK	AC_{In} > 0.76 x AC_N (AC_N = 100 V AC)

Signal output: LED status indicator

Signalization designation	DC OK
Status display	LED
Color	green
DC OK	U_{OUT} > 0.9 x U_N (U_N = 24 V DC)

Electrical properties

Number of phases	1
Insulation voltage input/output	4 kV AC (type test)
	3 kV AC (routine test)

Product properties

Product type	Power supply
Product family	TRIO POWER IP67
MTBF (IEC 61709, SN 29500)	> 1475000 h (25 °C)
	> 1000000 h (40 °C)
	> 500000 h (60 °C)

Insulation characteristics

Protection class	I
Overvoltage category (EN 61010-1)	II (≤ 4000 m)
Overvoltage category (EN 62477-1)	III (≤ 2000 m)
Pollution degree	2 (IEC 61010-1)

Dimensions

Item dimensions

Width	100 mm
Height	162 mm
Depth	53 mm

Drill hole

Diameter	4.2 mm

Installation dimensions

Installation distance right/left	20 mm / 20 mm
Installation distance top/bottom	50 mm / 100 mm

Mounting

Mounting type	Panel mounting
With protective coating	no

Material specifications

Flammability rating according to UL 94 (housing / terminal blocks)	V0
Housing material	Metal
Type of housing	Aluminum (AlMg3)

Environmental and real-life conditions

Ambient conditions

Degree of protection	IP65
	IP67
Ambient temperature (operation)	-25 °C ... 70 °C (Derating > 60 °C: 2 %/K)
Ambient temperature (storage/transport)	-40 °C ... 85 °C
Maximum altitude	≤ 4000 m (> 2000 m, Derating: 10 %/1000 m)
Climatic class	4K26 (EN 60721-3-4)
Max. permissible relative humidity (operation)	≤ 100 % (at 25 °C, non-condensing)
Permissible humidity (operation)	≤ 100 % (at 25 °C, non-condensing)
Shock	18 ms, 30g, in each space direction (according to IEC 60068-2-27)
Vibration (operation)	10 Hz ... 59.6 Hz, amplitude ±0.35 mm (in accordance with IEC 60068-2-6)
	59.6 Hz ... 150 Hz, 5g, 20 cycles

Standards and regulations

Electrical safety

Standard designation	Electrical safety
Standards/specifications	IEC 61010-1

Protective extra-low voltage

Standard designation	Protective extra-low voltage
Standards/specifications	IEC 61010-1
	IEC 61010-2-201 (SELV)

Low-voltage power supplies, DC output

Standard designation	Low-voltage power supplies, DC output
Standards/specifications	EN 61204-3

Safety requirements for electrical equipment for measurement, control, and laboratory use

Standard designation	Safety requirements for electrical equipment for measurement, control, and laboratory use
Standards/specifications	IEC 61010-1

Limit values for harmonic currents

Standard designation	Limit values for harmonic currents
Standards/specifications	EN 61000-3-2

Degrees of protection provided by enclosures (IP code)

Standard designation	Degrees of protection provided by enclosures (IP code)
Standards/specifications	EN/IEC 60529

Mains variation/undervoltage

Standard designation	Mains variation/undervoltage
Standards/specifications	SEMI F47 - 0706

Approvals

UL

Identification	NEC Class 2 according to UL 1310

UL

Identification	UL/C-UL Listed UL 61010-1

UL

Identification	UL/C-UL Listed UL 61010-2-201

EMC data

Electromagnetic compatibility	Conformance with EMC Directive 2014/30/EU
Low Voltage Directive	Conformance with Low Voltage Directive 2014/35/EC
Interference emission	Interference emission in accordance with EN 61000-6-3 (residential and commercial) and EN 61000-6-4 (industrial)
Noise immunity	Immunity in accordance with EN 61000-6-1 (residential), EN 61000-6-2 (industrial)

Conducted noise emission

Standards/regulations	EN 55016
	EN 61000-6-3 (Class B)

Noise emission

Standards/regulations	EN 55011 (EN 55022)

Noise emission

Standards/regulations	EN 55016
	EN 61000-6-3 (Class B)

Harmonic currents

Standards/regulations	EN 61000-3-2
	EN 61000-3-2 (Class A)

Electrostatic discharge

Standards/regulations	EN 61000-4-2

Electrostatic discharge

Contact discharge	6 kV (Test Level 3)
Comments	Criterion A

Electromagnetic HF field

Standards/regulations	EN 61000-4-3

Electromagnetic HF field

Frequency range	80 MHz ... 1 GHz
Test field strength	10 V/m (Test Level 3)
Frequency range	1 GHz ... 2 GHz
Test field strength	10 V/m (Test Level 3)
Frequency range	2 GHz ... 6 GHz
Test field strength	10 V/m (Test Level 3)
Comments	Criterion A

Fast transients (burst)

Standards/regulations	EN 61000-4-4

Fast transients (burst)

Input	4 kV (Test Level 3 - asymmetrical)
Output	2 kV (Test Level 3 - asymmetrical)
Comments	Criterion A

Surge voltage load (surge)

Standards/regulations	EN 61000-4-5

Surge voltage load (surge)

Input	2 kV (Test Level 4 - symmetrical)
	4 kV (Test Level 4 - asymmetrical)
Output	1 kV (Test Level 3 - symmetrical)
	2 kV (Test Level 3 - asymmetrical)
Comments	Criterion A

Conducted interference

Standards/regulations	EN 61000-4-6

Conducted interference

Input/Output	asymmetrical
Frequency range	0.15 MHz ... 80 MHz
Comments	Criterion A
Voltage	10 V (Test Level 3)

Voltage dips

Standards/regulations	EN 61000-4-11
Voltage	230 V AC
Frequency	50 Hz
Voltage dip	70 %
Number of periods	25 periods
Comments	Criterion A
Voltage dip	40 %
Number of periods	10 periods
Comments	Criterion B
Voltage dip	0 %
Number of periods	1 period

Comments	Criterion A

Emitted interference

Standards/regulations	EN 61000-6-3
Radio interference voltage in acc. with EN 55011	EN 55011 (EN 55022) Class B, area of application: Industry and residential
Emitted radio interference in acc. with EN 55011	EN 55011 (EN 55022) Class B, area of application: Industry and residential

Criteria

Criterion A	Normal operating behavior within the specified limits.
Criterion B	Temporary impairment to operational behavior that is corrected by the device itself.
Criterion C	Temporary adverse effects on the operating behavior, which the device corrects automatically or which can be restored by actuating the operating elements.

Drawings

Dimensional drawing

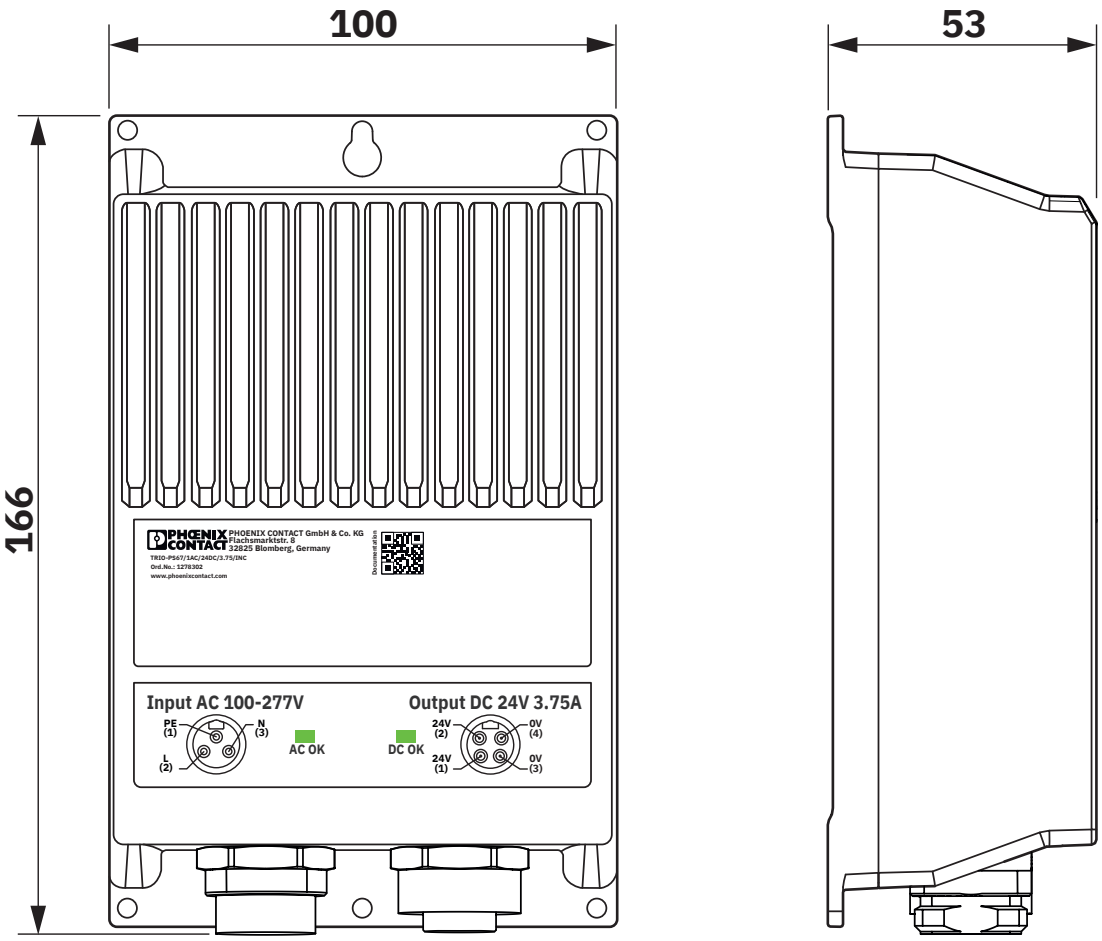

Device dimensions (dimensions in mm)

Diagram

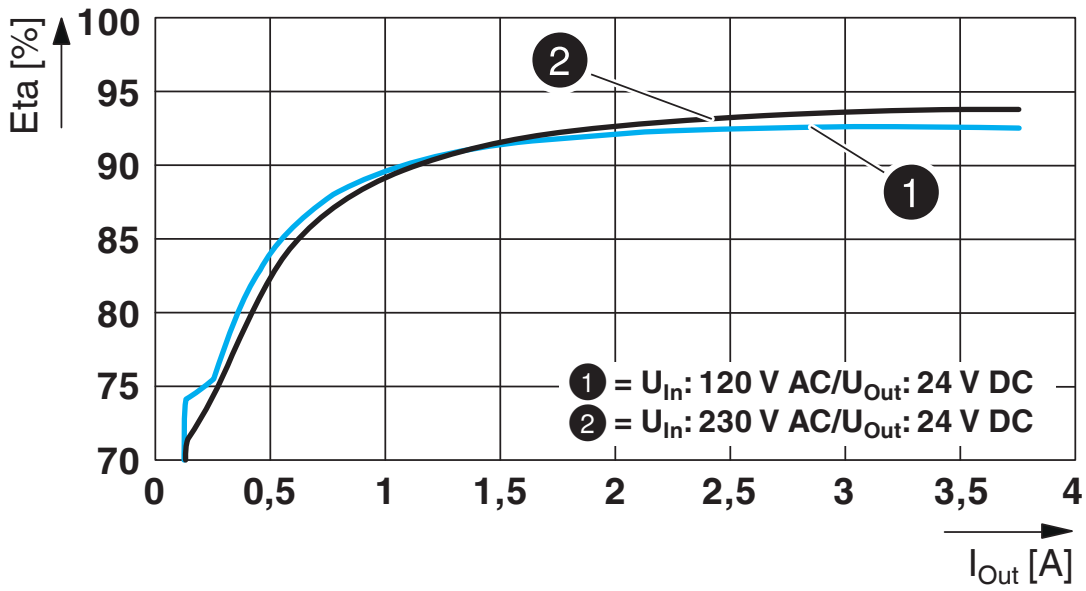

Efficiency

Diagram

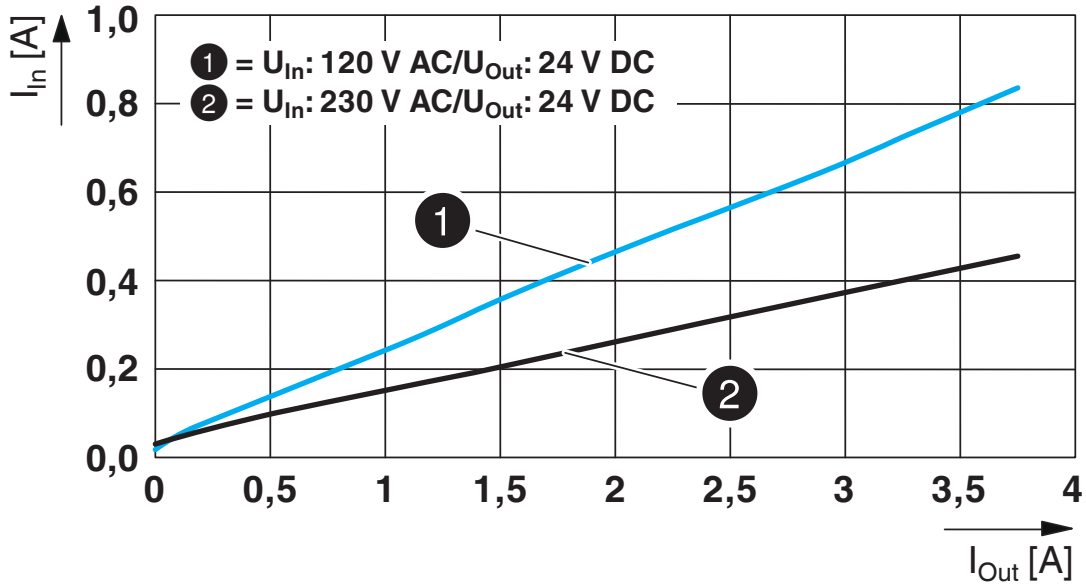

Input current/output current

Diagram

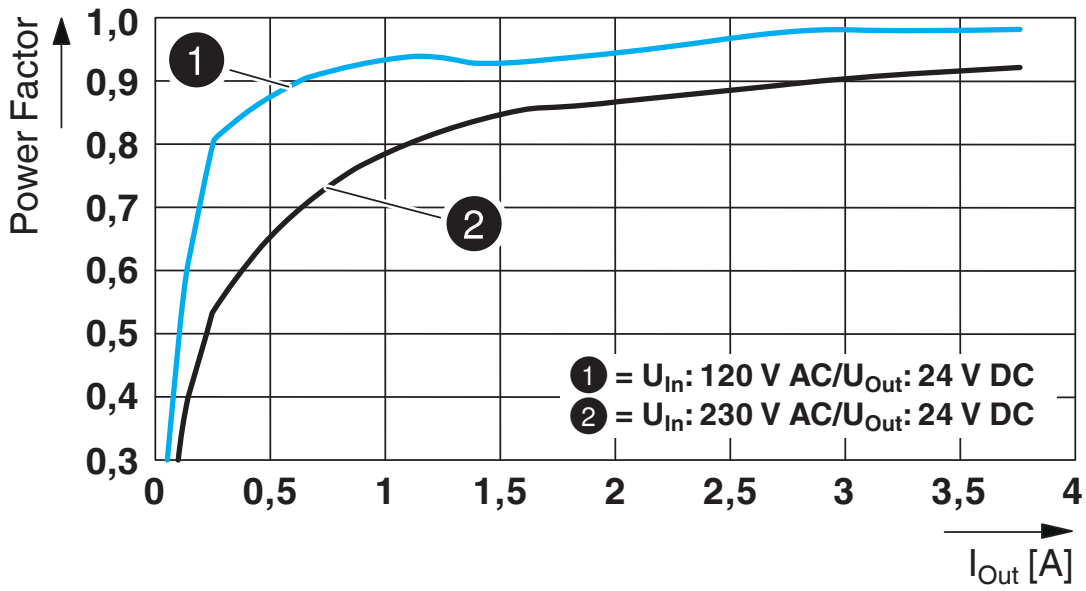

Power factor

Diagram

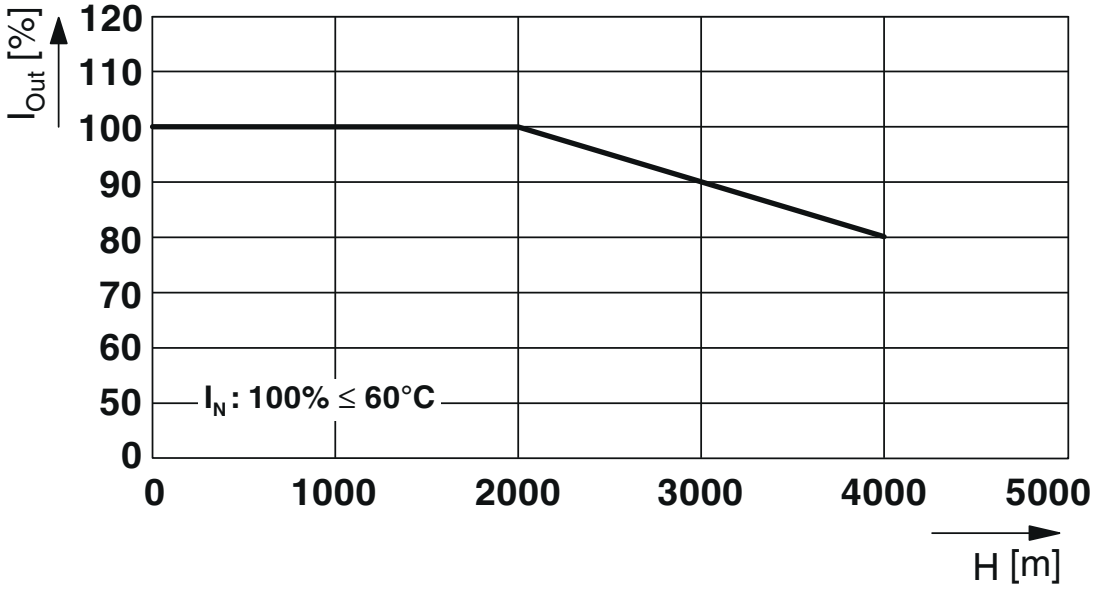

Output current/installation altitude

Block diagram

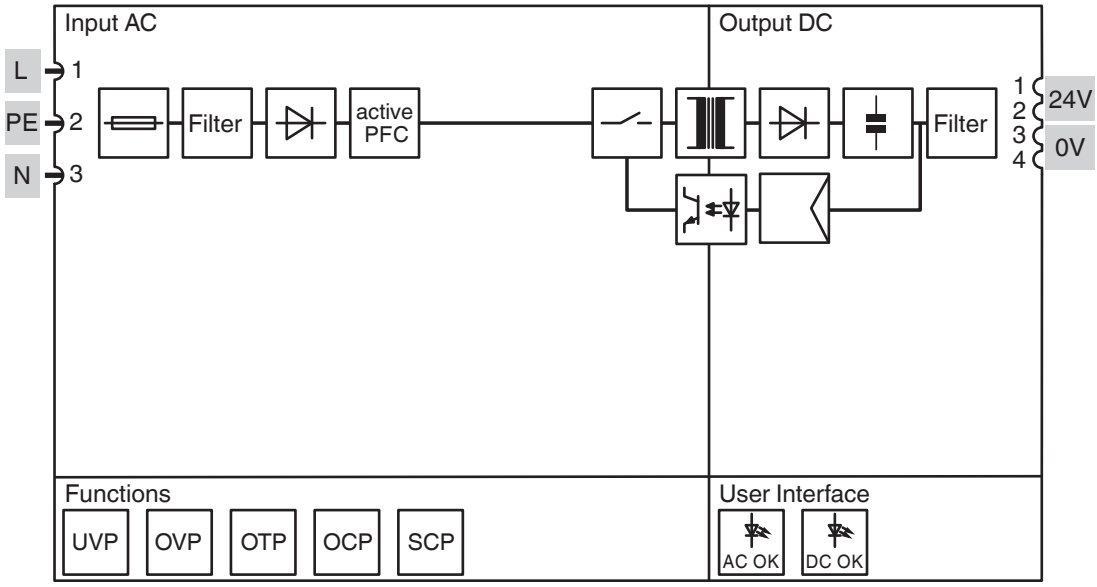

Block diagram

Approvals

To download certificates, visit the product detail page: https://www.phoenixcontact.com/gb/products/1278302

cULus Listed
Approval ID: FILE E 123528

Classifications

ECLASS

ECLASS-13.0	27040701
ECLASS-15.0	27040701

ETIM

ETIM 10.0	EC002540

UNSPSC

UNSPSC 21.0	39121000

Environmental product compliance

EU RoHS

Fulfills EU RoHS substance requirements	Yes
Exemption	6(c), 7(c)-I

China RoHS

Environment friendly use period (EFUP)	EFUP-25
	An article-related China RoHS declaration table can be found in the download area for the respective article under "Manufacturer declaration". For all articles with EFUP-E, no China RoHS declaration table issued and required.

EU REACH SVHC

REACH candidate substance (CAS No.)	Lead(CAS: 7439-92-1)
SCIP	550f7d17-5c2a-4edc-99f3-5dc184477285

EF3.1 Climate Change

CO2e kg	23.668 kg CO2e

Phoenix Contact 2026 © - all rights reserved
https://www.phoenixcontact.com

PHOENIX CONTACT Ltd
Halesfield 13, Telford
Shropshire, TF7 4PG
01952 681700
info@phoenixcontact.co.uk