LUMGATE 277 2DOR/1AO DALI - Luminaire control unit

1274016

https://www.phoenixcontact.com/gb/products/1274016

Please be informed that the data shown in this PDF document is generated from our online catalog. Please find the complete data in the user documentation. Our general terms of use for downloads are valid.

CRA-READY



Luminaire control unit for controlling LED drivers, 110 V ... 277 V input voltage, 2 relay outputs, 8 A load current, up to 8 LED drivers can be controlled, 10 V analog interface, DALI interface, measurement of load currents

Product description

The intelligent Lumgate luminaire control unit is used to couple a light management system to tunnel luminaires. The luminaires are switched, dimmed, and monitored via DALI, analog interface, and load relays. Suitable for installation in driver boxes or directly in the luminaire.

Your advantages

- Easy integration into existing light fittings
- Failsafe behavior in the event of faulty communication (freely definable substitute values)
- Up to 8 DALI ballasts can be connected in accordance with IEC 62386
- 2 relay outputs with soft start function to reduce the inrush current of the LED drivers

Commercial data

Item number	1274016
Packing unit	1 pc
Minimum order quantity	1 pc
Sales key	DREDIA
Product key	DREDIA
GTIN	4063151466152
Weight per piece (including packing)	215.9 g
Weight per piece (excluding packing)	193 g
Country of origin	Information on the country of origin is provided with the delivery.

Technical data

Notes

Note on application	Only for industrial use
Note on application	As things stand now, we are preparing the product so that, as of December 11, 2027, it will comply with the requirements of the EU Cyber Resilience Act (CRA) based on the information currently available regarding the CRA.

Product properties

Product type	Gateways/Proxies
Product family	Stand-alone
Type	Stand-alone
Special properties	The product is being prepared for compliance with the Cyber Resilience Act (CRA)
Diagnostics messages	Bus error in INTERBUS

Insulation characteristics

Overvoltage category	III
Pollution degree	2

System properties

Programming data

ID code (dec.)	51
Input address area	16 bit
Output address area	16 bit

Electrical properties

Supply:

Designation	Device supply
Supply voltage	max. 250 V AC (Class II / EN 61347)
Supply voltage range	110 V AC ... 277 V AC -13 % ... +6 %
Current consumption	max. 8 A (with active consumers)

Input data

Measurement: Current

Nominal current I_N	max. 8000 mA (internal)

Output data

Analog:

Output name	Analog voltage output
Number of outputs	1
D/A converter resolution	8 bit

Current output signal	max. -20 mA (Current sink)
Voltage output signal	1 V ... 10 V
Permissible cable length	max. 0.5 m

Digital:

Output name	Relay output
Number of outputs	2
Output voltage	250 V AC (Soft start function to reduce the inrush current of the LED drivers, not suitable for inductive loads)
Output current	max. 8 A (max. 5 A per relay, resistive load for applications with UL/CSA approval)
Nominal output voltage	max. 277 V AC (50 Hz ... 60 Hz)
Switching power	max. 2216 W

Connection data

Supply

Connection method	Push-in spring connection
Note on the connection method	Use copper wire, that is approved up to 85°C.
Conductor cross-section, rigid	0.34 mm² ... 4 mm²
Conductor cross-section, flexible	0.2 mm² ... 2.5 mm²
Conductor cross-section AWG	24 ... 12
Stripping length	10 mm

INTERBUS

Connection method	Push-in spring connection
Note on the connection method	pluggable
Conductor cross-section, rigid	0.2 mm² ... 1.5 mm²
Conductor cross-section, flexible	0.2 mm² ... 1.5 mm²
Conductor cross-section AWG	24 ... 16
Stripping length	10 mm

DALI and analog output

Connection method	Push-in spring connection
Note on the connection method	pluggable
Conductor cross-section, rigid	0.2 mm² ... 1.5 mm²
Conductor cross-section, flexible	0.2 mm² ... 1.5 mm²
Conductor cross-section AWG	24 ... 16
Stripping length	10 mm

Relay output

Connection method	Push-in spring connection
Conductor cross-section, rigid	0.34 mm² ... 4 mm²
Conductor cross-section, flexible	0.2 mm² ... 2.5 mm²
Conductor cross-section AWG	24 ... 12
Stripping length	10 mm

Interfaces

Remote bus

Transmission speed	500 kBaud

DALI

No. of channels	1

Fieldbus: DALI

Designation	DALI
Output current	28 mA (guaranteed, max. 14 DALI devices)
	max. 40 mA
Type of protection	Overload protection

Signaling

Diagnostic messages

Diagnostics	Bus error in INTERBUS

Dimensions

Dimensional drawing	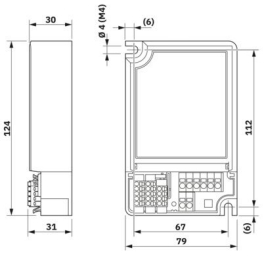
Width	124 mm
Height	79 mm
Depth	30 mm
Note on dimensions	Tolerance of all dimensions: ±0.2 mm

Material specifications

Color	white (RAL 9010)

Environmental and real-life conditions

Ambient conditions

Ambient temperature (operation)	-40 °C ... 65 °C
Degree of protection	IP20 (touch-proof (per manufacturer's declaration))
Air pressure (operation)	70 kPa ... 106 kPa (up to 3000 m above sea level)
Air pressure (storage/transport)	70 hPa ... 106 kPa (up to 3000 m above sea level)
Ambient temperature (storage/transport)	-40 °C ... 85 °C
Permissible humidity (operation)	5 % ... 95 % (up to 45°C in accordance with EN 60068-2-78:2013)

Permissible humidity (storage/transport)	5 % ... 90 % (according to DIN EN 61131-2, non-condensing, no ice formation)

Mechanical test

Shock in accordance with EN 60068-2-27/IEC 60068-2-27	30g, 11 ms period, half-sine shock pulse
Vibration resistance in accordance with EN 60068-2-6/IEC 60068-2-6	5g, 150 Hz

Mounting

Mounting type	Mounting on a surface (Mounting in the control box)

Drawings

Dimensional drawing

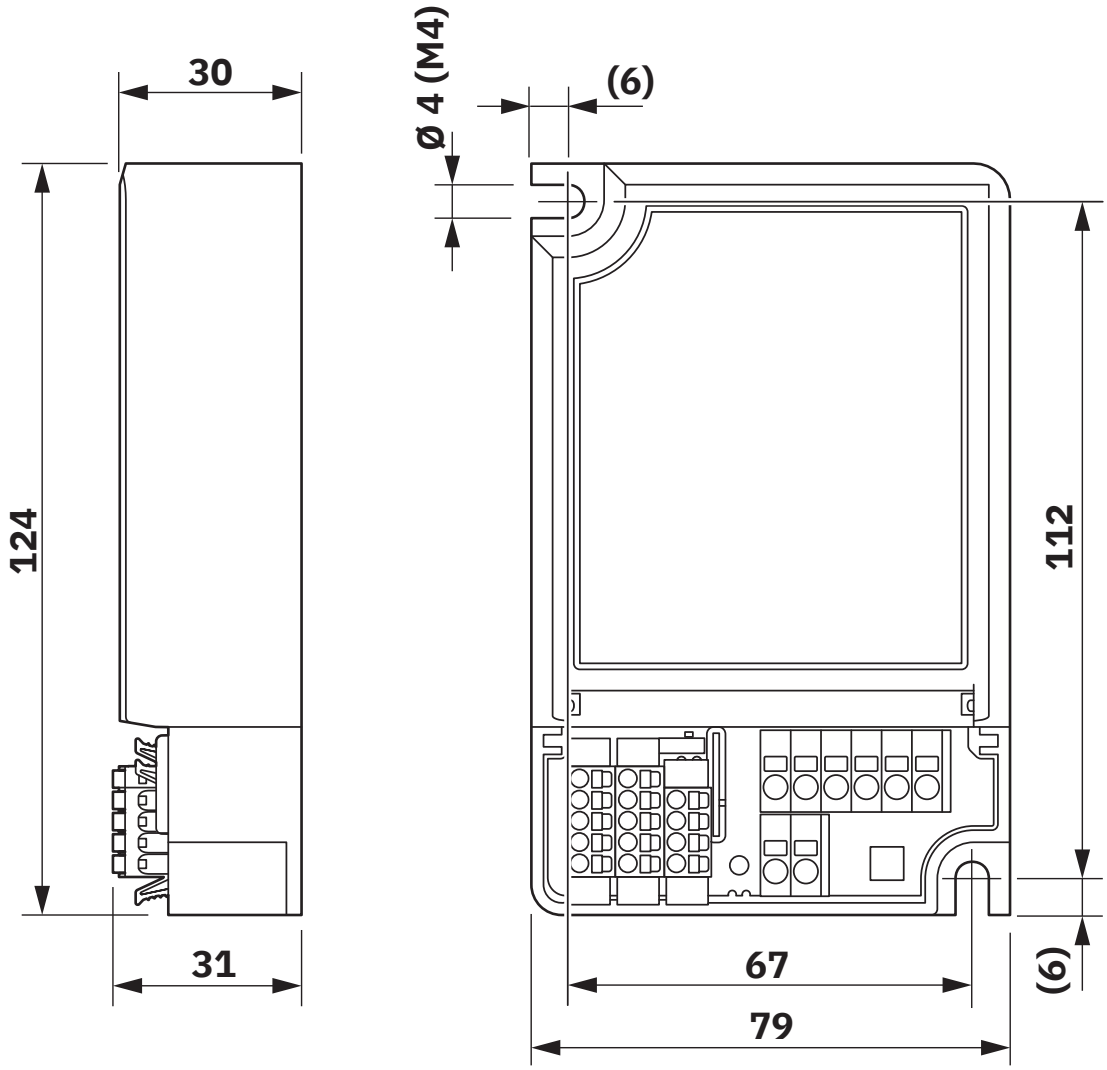

Approvals

To download certificates, visit the product detail page: https://www.phoenixcontact.com/gb/products/1274016

UL Listed
Approval ID: E238705

cUL Listed
Approval ID: E238705

Classifications

ECLASS

ECLASS-13.0	27111005
ECLASS-15.0	27111005

ETIM

ETIM 10.0	EC000533

UNSPSC

UNSPSC 21.0	32151602

Environmental product compliance

EU RoHS

Fulfills EU RoHS substance requirements	Yes
Exemption	7(a), 7(c)-I

China RoHS

Environment friendly use period (EFUP)	EFUP-50
	An article-related China RoHS declaration table can be found in the download area for the respective article under "Manufacturer declaration". For all articles with EFUP-E, no China RoHS declaration table issued and required.

EU REACH SVHC

REACH candidate substance (CAS No.)	Lead(CAS: 7439-92-1)
SCIP	b409dbe1-8397-4172-a888-bda12bbe6ccd

Phoenix Contact 2026 © - all rights reserved
https://www.phoenixcontact.com

PHOENIX CONTACT Ltd
Halesfield 13, Telford
Shropshire, TF7 4PG
01952 681700
info@phoenixcontact.co.uk