VAL-MS-T1/T2 335/12.5/3+1-FM-PT - Lightning/surge arrester type 1/2

1266417

https://www.phoenixcontact.com/gb/products/1266417

Please be informed that the data shown in this PDF document is generated from our online catalog. Please find the complete data in the user documentation. Our general terms of use for downloads are valid.



Universal varistor-based plug-in lightning/surge protective device for 3-phase power supply networks with separate N and PE (5-conductor system: L1, L2, L3, N, PE), for lightning protection levels III and IV, with remote indication contact. Cables connected via Push-in connection technology.

Your advantages

- Push-in connection technology for easy installation and uniform connection technology in the entire control cabinet
- Time savings when wiring thanks to not having to check the recommended connection torque
- Savings on additional installation materials thanks to through-wiring
- Permanent protective device monitoring due to optional remote indication contact with through-wiring

Commercial data

Item number	1266417
Packing unit	1 pc
Minimum order quantity	1 pc
Sales key	CL1151
Product key	CL1151
GTIN	4063151381295
Weight per piece (including packing)	614.2 g
Weight per piece (excluding packing)	583 g
Customs tariff number	85363030
Country of origin	DE

Technical data

Product properties

Product type	Arrester combination
Product family	VALVETRAB MS
IEC test classification	I / II
	T1 / T2
EN type	T1 / T2
IEC power supply system	TT
	TN-S
Type	DIN rail module, two-section, divisible
Number of positions	4
Surge protection fault message	Optical, remote indicator contact
Number of ports	One

Insulation characteristics

Overvoltage category	III
Pollution degree	2

Electrical properties

Nominal frequency f_N	50 Hz (60 Hz)

Indicator/remote signaling

Connection name	Remote fault indicator contact
Switching function	Changeover contact
Operating voltage	5 V AC ... 250 V AC
	30 V DC
Operating current	5 mA AC ... 750 mA AC
	1 A DC

Connection data

Connection method	Push-in connection
Stripping length	10 mm ... 12 mm
Conductor cross-section rigid	0.5 mm² ... 10 mm²
Conductor cross-section AWG	20 ... 8
Conductor cross-section, flexible, with ferrule, with plastic sleeve	0.5 mm² ... 6 mm²
Conductor cross-section, flexible, with ferrule, without plastic sleeve	0.5 mm² ... 10 mm²

Remote fault indicator contact

Connection method	Push-in connection
Stripping length	10 mm
Conductor cross-section flexible	0.2 mm² ... 2.5 mm²
Conductor cross-section rigid	0.2 mm² ... 2.5 mm²

Conductor cross-section AWG	30 ... 12

Dimensions

Dimensional drawing	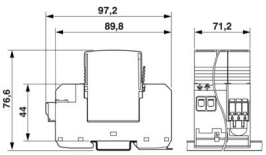
Width	71.2 mm
Height	97.2 mm
Depth	76.6 mm (incl. DIN rail 7.5 mm)
Horizontal pitch	4 HP

Material specifications

Color (Base element)	gray (RAL 7042)
Color (Male connector)	light gray (RAL 7035)
Flammability rating according to UL 94	V-0
CTI value of material	600
Insulating material	PA 6.6/PBT
Material group	I
Housing material	PA 6.6
	PBT

Mechanical properties

Mechanical data

Open side panel	No

Protective circuit

Mode of protection	L-N
	L-PE
	N-PE
Direction of action	3L-N & N-PE
Nominal voltage U_N	240/415 V AC (TN-S)
	240/415 V AC (TT)
Nominal frequency f_N	50 Hz (60 Hz)
Maximum continuous operating voltage U_C (L-N)	335 V AC
Maximum continuous operating voltage U_C (L-PE)	335 V AC
Maximum continuous operating voltage U_C (N-PE)	264 V AC
Rated load current I_L	32 A (at 6 mm²)
	40 A (at 10 mm²)
Protective conductor current I_{PE}	≤ 5 µA
Standby power consumption P_C	≤ 810 mVA

Nominal discharge current I_n (8/20) µs (L-N)	12.5 kA
Nominal discharge current I_n (8/20) µs (L-PE)	12.5 kA
Nominal discharge current I_n (8/20) µs (N-PE)	50 kA
Maximum discharge current I_{max} (8/20) µs	50 kA
Impulse discharge current (10/350) µs (L-N), charge	6.25 As
Impulse discharge current (10/350) µs (L-N), specific energy	39 kJ/Ω
Impulse discharge current (10/350) µs (L-N), peak current value I_{imp}	12.5 kA
Impulse discharge current (10/350) µs (L-PE), charge	6.25 As
Impulse discharge current (10/350) µs (L-PE), specific energy	39 kJ/Ω
Impulse discharge current (10/350) µs (L-PE), peak current value I_{imp}	12.5 kA
Impulse discharge current (10/350) µs (N-PE), charge	25 As
Impulse discharge current (10/350) µs (N-PE), specific energy	625 kJ/Ω
Impulse discharge current (10/350) µs (N-PE), peak current value I_{imp}	50 kA
Total discharge current I_{Total} (8/20) µs	50 kA
Total discharge current I_{Total} (10/350) µs	50 kA
Follow current interrupt rating I_{fi} (N-PE)	100 A
Short-circuit current rating I_{SCCR}	25 kA
Voltage protection level U_p (L-N)	≤ 1.2 kV
	≤ 1.6 kV (30 kA - 8/20 µs)
Voltage protection level U_p (L-PE)	≤ 2 kV
Voltage protection level U_p (N-PE)	≤ 1.7 kV
Residual voltage U_{res} (L-N)	≤ 1.2 kV (at I_n)
	≤ 1.1 kV (at 10 kA)
	≤ 1 kV (at 5 kA)
	≤ 0.9 kV (at 3 kA)
Residual voltage U_{res} (L-PE)	≤ 2 kV (at I_n)
	≤ 1.5 kV (at 10 kA)
	≤ 1.2 kV (at 5 kA)
	≤ 1.1 kV (at 3 kA)
Residual voltage U_{res} (N-PE)	≤ 0.6 kV (at I_n)
	≤ 0.5 kV (at 10 kA)
	≤ 0.5 kV (at 5 kA)
	≤ 0.4 kV (at 3 kA)
TOV behavior at U_T (L-N)	415 V AC (5 s / withstand mode)
	457 V AC (120 min / safe failure mode)
TOV behavior at U_T (L-PE)	415 V AC (5 s / withstand mode)
	457 V AC (120 min / safe failure mode)
	1657 V AC (200 ms / withstand mode)
TOV behavior at U_T (N-PE)	1200 V AC (200 ms / withstand mode)
Response time t_A (L-N)	≤ 25 ns

Response time t_A (L-PE)	≤ 100 ns
Response time t_A (N-PE)	≤ 100 ns
Max. backup fuse with V-type through wiring	32 A (gG - 6 mm²)
	35 A (gG - 10 mm²)
	40 A (MCB C - 10 mm²)
Max. backup fuse with branch wiring	160 A (gG)

Environmental and real-life conditions

Ambient conditions

Degree of protection	IP20 (only when all terminal points are used)
Ambient temperature (operation)	-40 °C ... 85 °C
Ambient temperature (storage/transport)	-40 °C ... 85 °C
Altitude	≤ 2000 m (amsl)
Permissible humidity (operation)	5 % ... 95 %
Shock (operation)	25g (Half-sine / 11 ms / 3x ±X, ±Y, ±Z)
Vibration (operation)	5g (10 ... 500 Hz / 2.5 h / X, Y, Z)

Standards and regulations

Standards/specifications	IEC 61643-11
Note	2011
Standards/specifications	EN 61643-11
Note	2012

Mounting

Mounting type	DIN rail: 35 mm

Drawings

Dimensional drawing

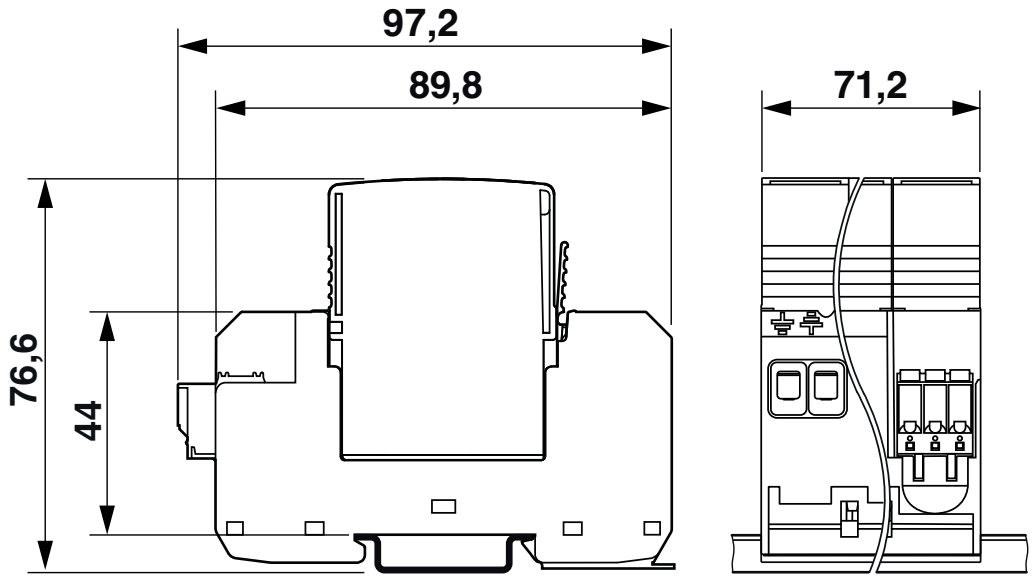

Diagram

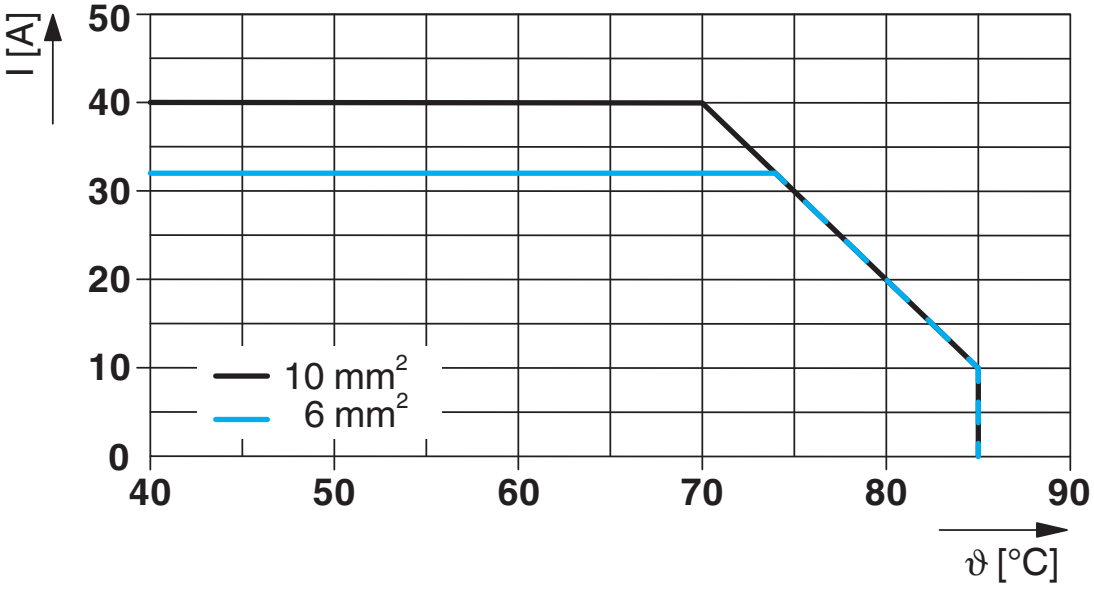

Circuit diagram

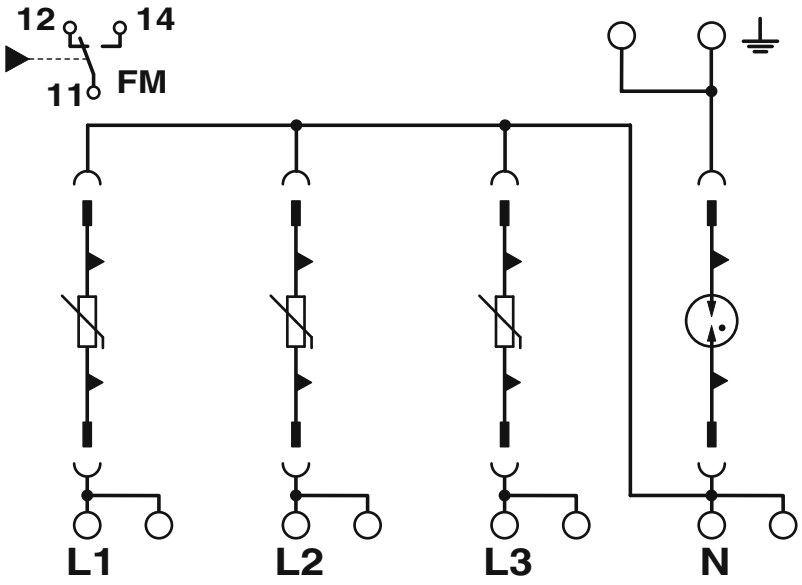

Approvals

To download certificates, visit the product detail page: https://www.phoenixcontact.com/gb/products/1266417

IECEE CB Scheme
Approval ID: NL-71987

CCA
Approval ID: NTR-NL 7875

KEMA-KEUR
Approval ID: 71-118125

UAE-RoHS
Approval ID: 23-10-88705

Classifications

ECLASS

ECLASS-13.0	27171201
ECLASS-15.0	27171201

ETIM

ETIM 10.0	EC000381

UNSPSC

UNSPSC 21.0	39121600

Environmental product compliance

EU RoHS

Fulfills EU RoHS substance requirements	Yes, No exemptions

China RoHS

Environment friendly use period (EFUP)	EFUP-E
	No hazardous substances above the limits

EU REACH SVHC

REACH candidate substance (CAS No.)	No substance above 0.1 wt%

Phoenix Contact 2026 © - all rights reserved
https://www.phoenixcontact.com

PHOENIX CONTACT Ltd
Halesfield 13, Telford
Shropshire, TF7 4PG
01952 681700
info@phoenixcontact.co.uk