ERS 1000-R BK - Room operating panel

1222439

https://www.phoenixcontact.com/gb/products/1222439

Please be informed that the data shown in this PDF document is generated from our online catalog. Please find the complete data in the user documentation. Our general terms of use for downloads are valid.



The product photo shows a variant of the item

Emalytics Room Switch - compact operating panel for room functions such as lighting, shading, and temperature settings. With two RJ45 connections and integrated Ethernet switch. Free driver for integration into the Niagara Framework.

Product description

The flexibly configurable ERS 1000 room operator panel is suitable for installation in many standard switch programs. The device can be combined with various sensors as an option. It is operated with an intuitive menu navigation via the color display and short-stroke keys. The ERS 1000 is controlled via a driver for the Niagara Framework. The software for operation and configuration is free of charge and can be downloaded via the Niagara Marketplace and via the Emalytics installations of the ILC 2050 BI.

Your advantages

- A single operating panel for a wide range of room functions
- Intuitive operation with color display and short-stroke keys
- Special functions such as scenario control and information display
- Integration into the IT infrastructure via Ethernet interface
- Easy connection and configuration in the Emalytics building management system
- Room climate measurement with extension with sensor modules
- Power supply via Ethernet

Commercial data

Item number	1222439
Packing unit	1 pc
Minimum order quantity	1 pc
Sales key	DRHAEA
Product key	DRHAEA
GTIN	4063151311155
Weight per piece (including packing)	139.1 g
Weight per piece (excluding packing)	92 g
Customs tariff number	85371098
Country of origin	Information on the country of origin is provided with the delivery.

Technical data

Notes

Note on application

Note on application	Only for industrial use

Product properties

Product type	Room operator panel

Insulation characteristics

Protection class	III

Computer data

Audio	integrated speakers
Keys	4
Extras	Brightness sensor
	Proximity sensor

Display

Display type	4.6 cm / 1.8"-TFT

Electrical properties

Maximum power dissipation for nominal condition	2.4 W

Supply

Supply voltage	48 V DC

Interfaces

Network	2x Ethernet (10/100 Mbps), RJ45

Dimensions

Installation dimensions

Width / Height / Installation depth	56 mm / 56 mm / 50 mm (Installation in flush-type socket)

Material specifications

Color (Actuating element)	black (RAL 9005)

Environmental and real-life conditions

Ambient conditions

Degree of protection	IP30
Ambient temperature (operation)	-10 °C ... 40 °C
Ambient temperature (storage/transport)	-30 °C ... 80 °C

Mounting

Mounting type	Flush-type socket

Drawings

Dimensional drawing

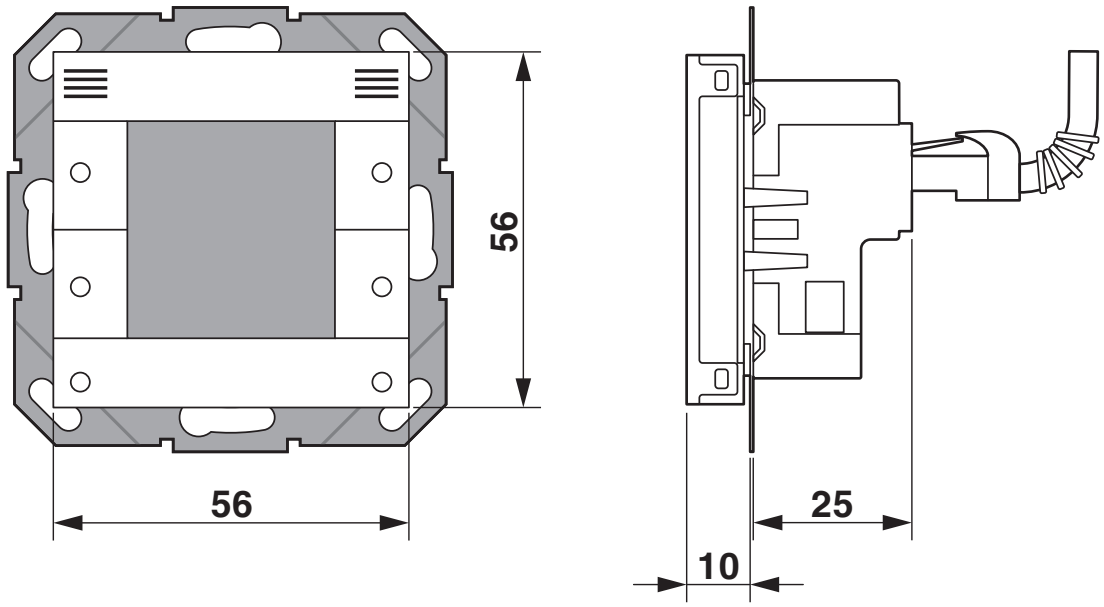

Classifications

ECLASS

ECLASS-13.0	27330201

ETIM

ETIM 9.0	EC001412

UNSPSC

UNSPSC 21.0	43211900

Environmental product compliance

EU RoHS

Fulfills EU RoHS substance requirements	Yes, No exemptions

China RoHS

Environment friendly use period (EFUP)	EFUP-E
	No hazardous substances above the limits

EU REACH SVHC

REACH candidate substance (CAS No.)	No substance above 0.1 wt%

Phoenix Contact 2026 © - all rights reserved
https://www.phoenixcontact.com

PHOENIX CONTACT Ltd
Halesfield 13, Telford
Shropshire, TF7 4PG
01952 681700
info@phoenixcontact.co.uk