SZK PH2 VDE - Screwdriver

1205163

https://www.phoenixcontact.com/gb/products/1205163

Please be informed that the data shown in this PDF document is generated from our online catalog. Please find the complete data in the user documentation. Our general terms of use for downloads are valid.



Screwdriver, PH crosshead, VDE insulated, size: PH 2 x 100 mm, 2-component grip, with non-slip grip

Your advantages

- Screwdrivers for Phillips screws with Pozidriv and Phillips Recess screw head
- VDE approval

Commercial data

Item number	1205163
Packing unit	10 pc
Minimum order quantity	10 pc
Sales key	BH3145
Product key	BH3145
GTIN	4017918019174
Weight per piece (including packing)	97.19 g
Weight per piece (excluding packing)	97.19 g
Customs tariff number	82054000
Country of origin	CZ

Technical data

Notes

Environmental Product Compliance

California Proposition 65	Further information on California's prop. 65 is available under "Downloads" in the manufacturer's declaration

Product properties

Product type	Screwdriver tools
Type	Phillips

Connection data

Output	Crosshead/Phillips Recess

Dimensions

Dimensional drawing	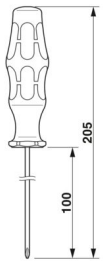
Width	37 mm
Blade width	6 mm
Blade height	100 mm
Length	205 mm
Wrench size	0 mm
Wrench size for mounting	0 mm

Material specifications

Material	alloyed tool steel

Standards and regulations

Tests	DIN/ISO 8764-1 PH IEC 60900:2004

Drawings

Dimensional drawing

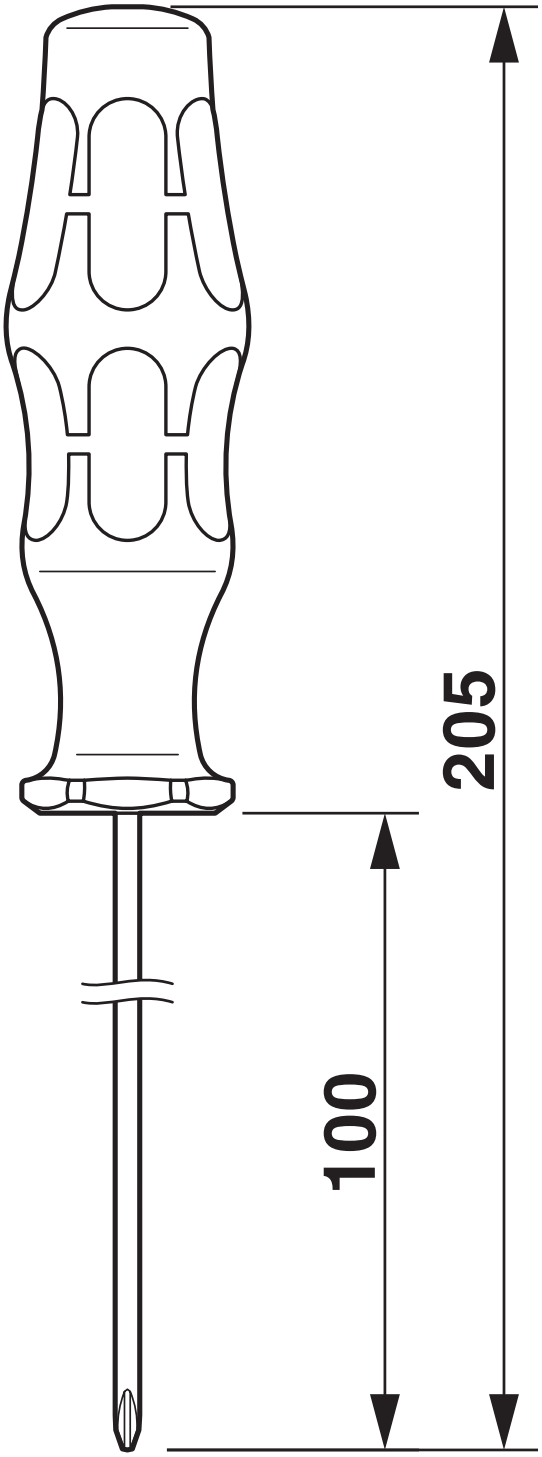

Approvals

To download certificates, visit the product detail page: https://www.phoenixcontact.com/gb/products/1205163

EAC
Approval ID: RU x-DE.xx08.B.02974

VDE approval of drawings
Approval ID: 086858

Classifications

ECLASS

ECLASS-13.0	21040406
ECLASS-15.0	21040406

ETIM

ETIM 10.0	EC000144

UNSPSC

UNSPSC 21.0	27111700

Environmental product compliance

EU RoHS

Fulfills EU RoHS substance requirements	Not applicable, No electrical and electronic equipment (EEE), cannot be used in EEE

EU REACH SVHC

REACH candidate substance (CAS No.)	No substance above 0.1 wt%

EF3.1 Climate Change

CO2e kg	1.121 kg CO2e

Phoenix Contact 2026 © - all rights reserved
https://www.phoenixcontact.com

PHOENIX CONTACT Ltd
Halesfield 13, Telford
Shropshire, TF7 4PG
01952 681700
info@phoenixcontact.co.uk