SZS 1,0X6,5 VDE - Screwdriver

1205079

https://www.phoenixcontact.com/gb/products/1205079

Please be informed that the data shown in this PDF document is generated from our online catalog. Please find the complete data in the user documentation. Our general terms of use for downloads are valid.



Screwdriver, slot-headed, VDE insulated, size: 1.0 x 6.5 x 150 mm, 2-component grip, with non-slip grip

Your advantages

- For working on or in the vicinity of live parts up to 1000 V AC or 1500 V DC
- The tools feature ergonomic two-component safety handles
- Large contact surface of blades inside screw head
- Individually tested safety screwdrivers according to DIN EN 60900 (VDE 0682-201)

Commercial data

Item number	1205079
Packing unit	10 pc
Minimum order quantity	10 pc
Sales key	BH3144
Product key	BH3144
GTIN	4017918019112
Weight per piece (including packing)	89.4 g
Weight per piece (excluding packing)	88.6 g
Customs tariff number	82054000
Country of origin	CZ

Technical data

Notes

Environmental Product Compliance

California Proposition 65	Further information on California's prop. 65 is available under "Downloads" in the manufacturer's declaration

Product properties

Product type	Screwdriver tools
Type	Bladed

Connection data

Output	Bladed

Dimensions

Dimensional drawing	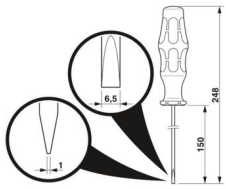
Width	33 mm
Blade width	6.5 mm
Blade height	150 mm
Length	248 mm
Wrench size	0 mm
Wrench size for mounting	0 mm
Blade thickness	1 mm

Material specifications

Material	alloyed tool steel

Standards and regulations

Tests	DIN/ISO 2380-1 IEC 60900:2004

Drawings

Dimensional drawing

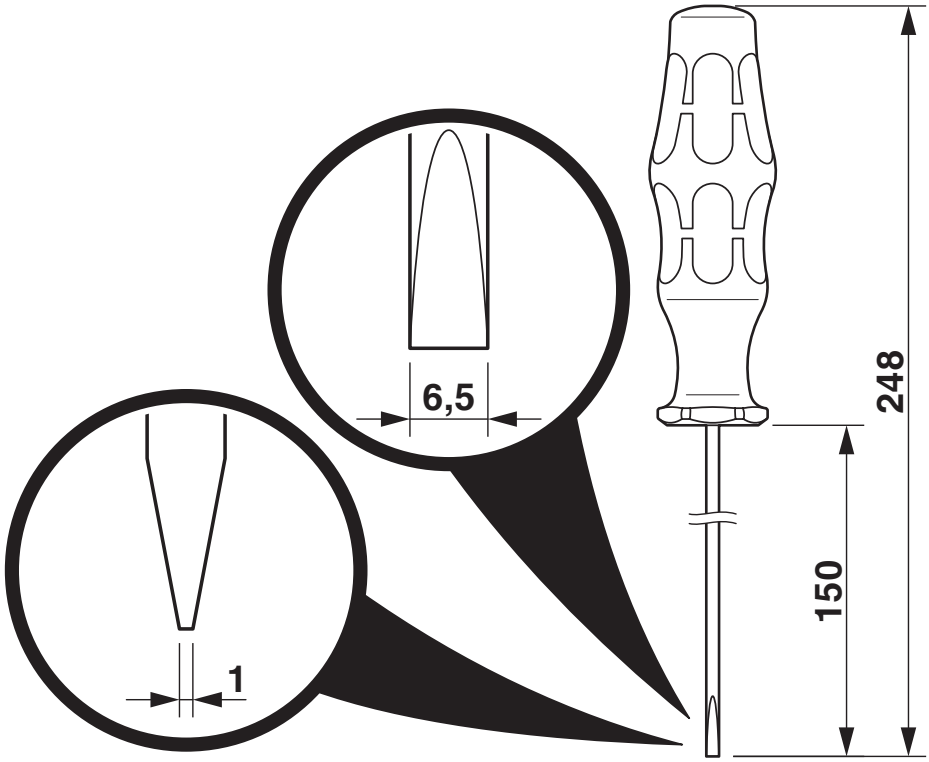

Approvals

To download certificates, visit the product detail page: https://www.phoenixcontact.com/gb/products/1205079

EAC
Approval ID: RU x-DE.xx08.B.02974

VDE Zeichengenehmigung
Approval ID: 086858

EAC
Approval ID: 7500525.13.12.00701

Classifications

ECLASS

ECLASS-13.0	21040407
ECLASS-15.0	21040407

ETIM

ETIM 10.0	EC000158

UNSPSC

UNSPSC 21.0	27111700

Environmental product compliance

EU RoHS

Fulfills EU RoHS substance requirements	Not applicable, No electrical and electronic equipment (EEE), cannot be used in EEE

EU REACH SVHC

REACH candidate substance (CAS No.)	No substance above 0.1 wt%

EF3.1 Climate Change

CO2e kg	1.228 kg CO2e

Phoenix Contact 2026 © - all rights reserved
https://www.phoenixcontact.com

PHOENIX CONTACT Ltd
Halesfield 13, Telford
Shropshire, TF7 4PG
01952 681700
info@phoenixcontact.co.uk