AXL SE SSDO4/2 2A - Safety module

1190017

https://www.phoenixcontact.com/gb/products/1190017

Please be informed that the data shown in this PDF document is generated from our online catalog. Please find the complete data in the user documentation. Our general terms of use for downloads are valid.

CRA-READY



Axioline Smart Elements, Digital output module, Functional safety, SafetyBridge technology, Safe digital outputs: 2 (2-channel assignment), 4 (1-channel assignment), 24 V DC, 2 A, connection technology: 2-conductor, degree of protection: IP20; The product is being prepared for compliance with the Cyber Resilience Act (CRA).

Product description

You can integrate Axioline Smart Elements into systems with the Smart Element interface. This Smart Element is a safe output module for use in a SafetyBridge system.

Your advantages

- Up to Cat. 4/PL e in accordance with EN ISO 13849-1, SIL 3 in accordance with EN IEC 62061, SIL 3 in accordance with IEC 61508
- 4 safe outputs for 1-channel assignment
- 2 safe outputs for 2-channel assignment

ELEKTROGERÄTE RÜCKNAHME

Commercial data

Item number	1190017
Packing unit	1 pc
Minimum order quantity	1 pc
Sales key	DNA831

Product key	DNA831
GTIN	4063151238285
Weight per piece (including packing)	48.43 g
Weight per piece (excluding packing)	36 g
Customs tariff number	85389091
Country of origin	DE

Technical data

Dimensions

Dimensional drawing	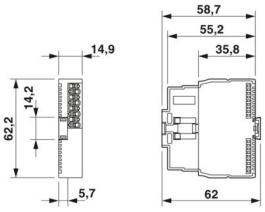
Width	14.9 mm
Height	62.2 mm
Depth	62 mm

Notes

Note on application	Only for industrial use
Note on application	As things stand now, we are preparing the product so that, as of December 11, 2027, it will comply with the requirements of the EU Cyber Resilience Act (CRA) based on the information currently available regarding the CRA.

Mounting

Mounting type	Plug-in mounting (Smart Element slot)
Mounting position	any

Material specifications

Color (Housing)	yellow (RAL 1018)
Material	PBT
Flammability rating according to UL 94	V-0

Interfaces

Smart Element interface

Number of interfaces	1
Connection method	Card edge connector

System properties

Programming data

Input address area	5 Byte
Output address area	6 Byte

Output data

Digital:

Output name	Safe digital outputs
Design of digital output	Semiconductor

Output description	EN 61131-2
Connection method	Push-in connection
Connection technology	2-conductor
Number of outputs	2 (2-channel assignment)
	4 (1-channel assignment)
Protective circuit	Short-circuit protection, overload protection of the outputs; electronic
Output voltage	24 V DC
Limitation of the voltage induced on circuit interruption	-15 V
Output current	max. 2 A (per output)
Maximum output current per channel	2 A
Maximum output current per module	4 A
Nominal output voltage	24 V DC
Load min.	1.5 kΩ (at nominal voltage)
Output voltage when switched off	< 5 V
Output current when switched off	< 2 mA
Nominal load, inductive	48 VA (1 H; 12 Ω; at nominal voltage)
Nominal load, ohmic	48 W (12 Ω, at nominal voltage)
Behavior with overload	Switch-off of the relevant output, restart upon acknowledgment
Behavior with inductive overload	Output can be destroyed
Switching frequency	1 Hz (0.2 Hz at > 1 A)
Reverse voltage resistance to short pulses	no

Product properties

Product type	I/O component
Product family	Axioline Smart Elements
Application	Functional safety
	SafetyBridge technology
Type	modular
Mounting position	any
Operating mode	SafetyBridge
Special properties	The product is being prepared for compliance with the Cyber Resilience Act (CRA)

Insulation characteristics

Overvoltage category	II (IEC 60664-1)
Pollution degree	2 (EN 60664-1)

Electrical properties

Maximum power dissipation for nominal condition	typ. 871 mW

Potentials: Axioline F local bus supply (U_{Bus})

Supply voltage	5 V DC (via bus base module)
Current draw	max. 120 mA (at U_{Bus} 5 V DC)
	typ. 93 mA (at U_{Bus} 5 V DC)

Potentials: Communications power supply of the Smart Elements (U_{SE})

Supply voltage	using card edge connectors

Potentials: I/O supply (U_P)

Supply voltage	24 V DC (using card edge connectors)
Supply voltage range	19.2 V DC ... 30 V DC (including all tolerances, including ripple)
Current draw	max. 30 mA ((Supply from U_P with 30 V DC, all outputs set, without supply to the actuators))
	typ. 25 mA ((Supply from U_P with 24 V DC, all outputs set, without supply to the actuators))
Current consumption	min. 21 mA ((Supply from U_P with 19.2 V DC, all outputs set, without supply to the actuators))
Power consumption	max. 900 mW
	min. 403 mW

Connection data

Connection technology

Connection name	I/O
Note on the connection method	Note the specification in the section Conductor cross-sections, and stripping and insertion lengths.

I/O

Connection method	Push-in connection
Note on the connection method	Note the specification in the section Conductor cross-sections, and stripping and insertion lengths.
Conductor cross-section, rigid	0.25 mm² ... 1.5 mm²
Conductor cross-section, flexible	0.25 mm² ... 1.5 mm²
Conductor cross-section AWG	24 ... 16
Stripping length	8 mm

Environmental and real-life conditions

Ambient conditions

Ambient temperature (operation)	-25 °C ... 60 °C
Degree of protection	IP20
Degree of protection at installation location	min. IP54
Air pressure (operation)	70 kPa ... 108 kPa
Air pressure (storage/transport)	66 kPa ... 108 kPa
Ambient temperature (storage/transport)	-40 °C ... 85 °C
Permissible humidity (operation)	5 % ... 95 % (non-condensing)
Permissible humidity (storage/transport)	5 % ... 95 % (non-condensing)

Mechanical test

Vibration resistance in accordance with EN 60068-2-6/IEC 60068-2-6	5g
Shock in accordance with EN 60068-2-27/IEC 60068-2-27	30g

Continuous shock in accordance with EN 60068-2-27/IEC 60068-2-27	10g

Standards and regulations

Protection class	III (IEC 61140, EN 61140, VDE 0140-1)

Air clearances and creepage distances

Air clearances and creepage distances	IEC 60664-1

Characteristics

Safety data: EN ISO 13849-1

Performance level (PL)	d (1-channel assignment)
	e (2-channel assignment)

Drawings

Dimensional drawing

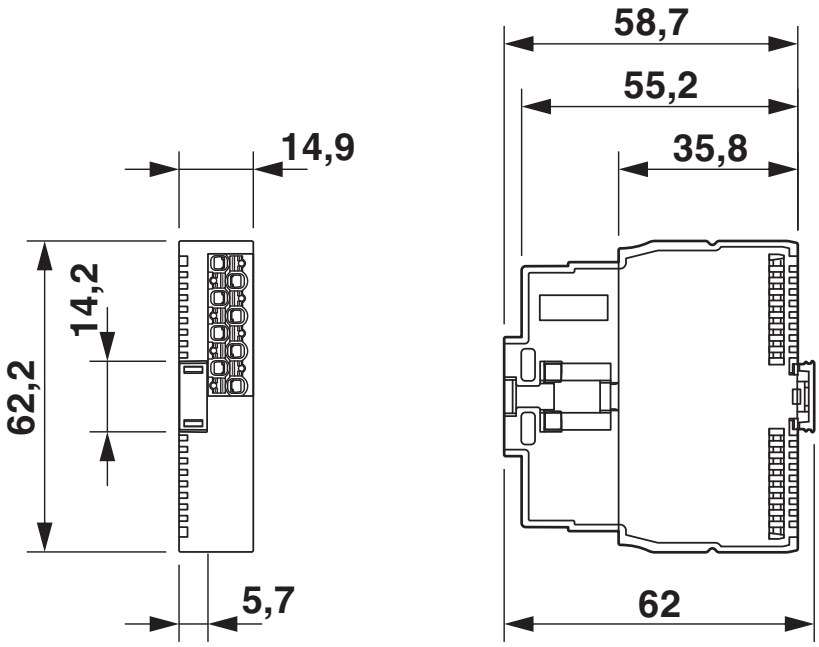

Dimensions

Approvals

To download certificates, visit the product detail page: https://www.phoenixcontact.com/gb/products/1190017

cULus Listed
Approval ID: E238705

Functional Safety
Approval ID: 968/FSP 2449.00/22

Classifications

ECLASS

ECLASS-13.0	27242604
ECLASS-15.0	27242604
ECLASS-15.0 ASSET	27250101

ETIM

ETIM 10.0	EC001599

UNSPSC

UNSPSC 21.0	32151600

Environmental product compliance

EU RoHS

Fulfills EU RoHS substance requirements	Yes
Exemption	7(a), 7(c)-I

China RoHS

Environment friendly use period (EFUP)	EFUP-50
	An article-related China RoHS declaration table can be found in the download area for the respective article under "Manufacturer declaration". For all articles with EFUP-E, no China RoHS declaration table issued and required.

EU REACH SVHC

REACH candidate substance (CAS No.)	Lead(CAS: 7439-92-1)
SCIP	12d8c347-3b9a-4ce6-86ff-b94c62f62620

EF3.1 Climate Change

CO2e kg	11.412 kg CO2e

Phoenix Contact 2026 © - all rights reserved
https://www.phoenixcontact.com

PHOENIX CONTACT Ltd
Halesfield 13, Telford
Shropshire, TF7 4PG
01952 681700
info@phoenixcontact.co.uk