# AXL SE SSDI8/3 - Safety module

1190012

https://www.phoenixcontact.com/gb/products/1190012

Please be informed that the data shown in this PDF document is generated from our online catalog. Please find the complete data in the user documentation. Our general terms of use for downloads are valid.

CRA-READY



Axioline Smart Elements, Digital input module, Functional safety, SafetyBridge technology, Safe digital inputs: 4 (2-channel assignment), 8 (1-channel assignment), 24 V DC, connection technology: 3-conductor, degree of protection: IP20; The product is being prepared for compliance with the Cyber Resilience Act (CRA).

## Product description

You can integrate Axioline Smart Elements into systems with the Smart Element interface. This Smart Element is a safe input module for use in a SafetyBridge system.

## Your advantages

- Up to Cat. 4/PL e in accordance with EN ISO 13849-1, SIL 3 in accordance with EN IEC 62061, SIL 3 in accordance with IEC 61508
- 8 safe inputs for 1-channel assignment
- 4 safe inputs for 2-channel assignment

ELEKTROGERÄTE RÜCKNAHME

## Commercial data

| | |
|---|---|
| Item number | 1190012 |
| Packing unit | 1 pc |
| Minimum order quantity | 1 pc |
| Sales key | DNA821 |

| | |
|---|---|
| Product key | DNA821 |
| GTIN | 4063151237479 |
| Weight per piece (including packing) | 48.43 g |
| Weight per piece (excluding packing) | 36 g |
| Customs tariff number | 85389091 |
| Country of origin | DE |

## Technical data

### Dimensions

| | |
|---|---|
| Dimensional drawing | 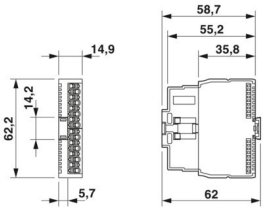 |
| Width | 14.9 mm |
| Height | 62.2 mm |
| Depth | 62 mm |

### Notes

| | |
|---|---|
| Note on application | Only for industrial use |
| Note on application | As things stand now, we are preparing the product so that, as of December 11, 2027, it will comply with the requirements of the EU Cyber Resilience Act (CRA) based on the information currently available regarding the CRA. |

### Mounting

| | |
|---|---|
| Mounting type | Plug-in mounting (Smart Element slot) |
| Mounting position | any |

### Material specifications

| | |
|---|---|
| Color (Housing) | yellow (RAL 1018) |
| Material | PBT |
| Flammability rating according to UL 94 | V-0 |

### Interfaces

Smart Element interface

| | |
|---|---|
| Number of interfaces | 1 |
| Connection method | Card edge connector |

### System properties

Programming data

| | |
|---|---|
| Input address area | 6 Byte |
| Output address area | 5 Byte |

### Input data

Digital:

| | |
|---|---|
| Input name | Safe digital inputs |
| Description of the input | EN 61131-2, type 3 |

| | |
|---|---|
| Number of inputs | 4 (2-channel assignment) |
| | 8 (1-channel assignment) |
| Cable length | max. 200 m (200 m from the clock output to the safe input (total based on forward and return path)) |
| Connection method | Push-in connection |
| Connection technology | 3-conductor |
| Input voltage range "0" signal | -3 V DC ... 5 V DC |
| Input voltage range "1" signal | 11 V DC ... 30 V DC |
| Nominal input voltage $U_{IN}$ | 24 V DC |
| Nominal input current at $U_{IN}$ | typ. 2.7 mA |
| Input filter time | 1.5 ms |
| | 3 ms (Default) |
| | 5 ms |
| | 15 ms |
| Protective circuit | Polarity reversal protection of the inputs; Diode |

## Product properties

| | |
|---|---|
| Product type | I/O component |
| Product family | Axioline Smart Elements |
| Application | Functional safety |
| | SafetyBridge technology |
| Type | modular |
| Mounting position | any |
| Operating mode | SafetyBridge |
| Special properties | The product is being prepared for compliance with the Cyber Resilience Act (CRA) |

Insulation characteristics

| | |
|---|---|
| Overvoltage category | II (IEC 60664-1) |
| Pollution degree | 2 (EN 60664-1) |

## Electrical properties

| | |
|---|---|
| Maximum power dissipation for nominal condition | typ. 520 mW |

Potentials

| | |
|---|---|
| Protection | external fusing via the system in which the Smart Element is used |
| Protective circuit | Surge protection of the supply voltage; electronic (35 V, 0.5 s) |
| | Polarity reversal protection of the supply voltage; via the system in which the Smart Element is used |

Potentials: Axioline F local bus supply ($U_{Bus}$)

| | |
|---|---|
| Supply voltage | 5 V DC (via bus base module) |
| Current draw | max. 140 mA (at $U_{Bus}$ 5 V DC) |
| | typ. 101 mA (at $U_{Bus}$ 5 V DC) |

Potentials: Communications power supply of the Smart Elements ($U_{SE}$)

| | |
|---|---|
| Supply voltage | using card edge connectors |

Potentials: I/O supply ($U_P$)

| | |
|---|---|
| Supply voltage | 24 V DC (using card edge connectors) |
| Supply voltage range | 19.2 V DC ... 30 V DC (including all tolerances, including ripple) |
| Current draw | max. 12 mA (Power supply from $U_p$ with 30 V DC, all inputs set, without power supply to the sensors via clock supplies OUT_T1 and OUT_T2) |
| | typ. 9 mA (Power supply from $U_p$ with 24 V DC, all inputs set, without power supply to the sensors via clock supplies OUT_T1 and OUT_T2) |
| Current consumption | min. 8 mA (Power supply from $U_p$ with 19.2 V DC, all inputs set, without power supply to the sensors via clock supplies OUT_T1 and OUT_T2) |
| Power consumption | max. 360 mW |
| | min. 154 mW |

## Connection data

Connection technology

| | |
|---|---|
| Connection name | I/O |
| Note on the connection method | Note the specification in the section Conductor cross-sections, and stripping and insertion lengths. |

I/O

| | |
|---|---|
| Connection method | Push-in connection |
| Note on the connection method | Note the specification in the section Conductor cross-sections, and stripping and insertion lengths. |
| Conductor cross-section, rigid | 0.25 mm² ... 1.5 mm² |
| Conductor cross-section, flexible | 0.25 mm² ... 1.5 mm² |
| Conductor cross-section AWG | 24 ... 16 |
| Stripping length | 8 mm |

## Environmental and real-life conditions

Ambient conditions

| | |
|---|---|
| Ambient temperature (operation) | -25 °C ... 60 °C |
| Degree of protection | IP20 |
| Degree of protection at installation location | min. IP54 |
| Air pressure (operation) | 70 kPa ... 108 kPa |
| Air pressure (storage/transport) | 66 kPa ... 108 kPa |
| Ambient temperature (storage/transport) | -40 °C ... 85 °C |
| Permissible humidity (operation) | 5 % ... 95 % (non-condensing) |
| Permissible humidity (storage/transport) | 5 % ... 95 % (non-condensing) |

Mechanical test

| | |
|---|---|
| Vibration resistance in accordance with EN 60068-2-6/IEC 60068-2-6 | 5g |
| Shock in accordance with EN 60068-2-27/IEC 60068-2-27 | 30g |

| | |
|---|---|
| Continuous shock in accordance with EN 60068-2-27/IEC 60068-2-27 | 10g |

## Standards and regulations

| | |
|---|---|
| Protection class | III (IEC 61140, EN 61140, VDE 0140-1) |

Air clearances and creepage distances

| | |
|---|---|
| Air clearances and creepage distances | IEC 60664-1 |

## Characteristics

Safety data: EN ISO 13849-1

| | |
|---|---|
| Performance level (PL) | d (1-channel assignment) |
| | e (2-channel assignment) |

## Drawings

Dimensional drawing

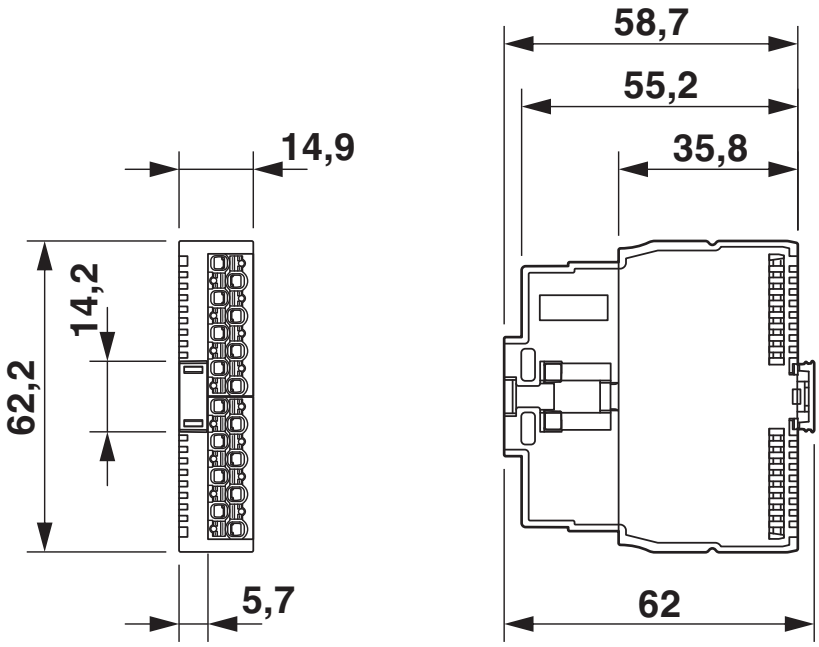


Dimensions

## Approvals

To download certificates, visit the product detail page: https://www.phoenixcontact.com/gb/products/1190012

**cULus Listed**
Approval ID: E238705

**Functional Safety**
Approval ID: 968/FSP 2449.00/22

## Classifications

### ECLASS

| | |
|---|---|
| ECLASS-13.0 | 27242604 |
| ECLASS-15.0 ASSET | 27250101 |
| ECLASS-15.0 | 27242604 |

### ETIM

| | |
|---|---|
| ETIM 10.0 | EC001599 |

### UNSPSC

| | |
|---|---|
| UNSPSC 21.0 | 32151600 |

## Environmental product compliance

EU RoHS

| | |
|---|---|
| Fulfills EU RoHS substance requirements | Yes |
| Exemption | 7(a), 7(c)-I |

China RoHS

| | |
|---|---|
| Environment friendly use period (EFUP) | EFUP-50 |
| | An article-related China RoHS declaration table can be found in the download area for the respective article under "Manufacturer declaration". For all articles with EFUP-E, no China RoHS declaration table issued and required. |

EU REACH SVHC

| | |
|---|---|
| REACH candidate substance (CAS No.) | Lead(CAS: 7439-92-1) |
| SCIP | 2913726b-1460-498d-a2f7-65e9937eae06 |

EF3.1 Climate Change

| | |
|---|---|
| CO2e kg | 11.56 kg CO2e |


Phoenix Contact 2026 © - all rights reserved
https://www.phoenixcontact.com



PHOENIX CONTACT Ltd
Halesfield 13, Telford
Shropshire, TF7 4PG
01952 681700
info@phoenixcontact.co.uk