AXL SE RTD4 PT1000 - Temperature module

1182190

https://www.phoenixcontact.com/gb/products/1182190

Please be informed that the data shown in this PDF document is generated from our online catalog. Please find the complete data in the user documentation. Our general terms of use for downloads are valid.

CRA-READY



Axioline Smart Elements, Temperature recording module, Analog RTD inputs: 4 (Pt 1000), connection technology: 3-conductor, degree of protection: IP20; The product is being prepared for compliance with the Cyber Resilience Act (CRA).

Product description

You can integrate Axioline Smart Elements into systems with the Smart Element interface. This Smart Element detects the signals of resistive temperature sensors.

Your advantages

- 4 analog input channels for the connection of resistance temperature detectors (Pt 1000)
- Connection of sensors in 3-conductor technology
- 2- and 4-conductor sensors can also be connected
- Data format: standardized representation
- Resolution: 16 bits
- Wire-break detection
- Substitute value behavior can be parameterized for each input
- Device rating plate stored

ELEKTROGERÄTE RÜCKNAHME

Commercial data

Item number	1182190
Packing unit	1 pc
Minimum order quantity	1 pc
Sales key	DRIB43
Product key	DRIB43
GTIN	4063151219215
Weight per piece (including packing)	39.82 g
Weight per piece (excluding packing)	35 g
Customs tariff number	85389099
Country of origin	DE

Technical data

Dimensions

Dimensional drawing	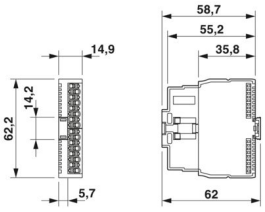
Width	14.9 mm
Height	62.2 mm
Depth	62 mm

Notes

Note on application	Only for industrial use
Note on application	As things stand now, we are preparing the product so that, as of December 11, 2027, it will comply with the requirements of the EU Cyber Resilience Act (CRA) based on the information currently available regarding the CRA.

Mounting

Mounting type	Plug-in mounting (Smart Element slot)
Mounting position	See the system in which the Smart Element is used.

Material specifications

Color (Housing)	gray (RAL 7042)

Interfaces

Smart Element interface

Number of interfaces	1
Connection method	Card edge connector
Start time until ready to operate	< 1000 ms

System properties

Programming data

Process data channel	64 bit
Input address area	8 Byte
Output address area	0 Byte

Fieldbus data telegram (PROFIBUS)

Required parameter data	24 Byte
Required configuration data	6 Byte

Input data

Analog:

Input name	Analog RTD inputs
Description of the input	Inputs for resistive temperature sensors
Number of inputs	4 (Pt 1000)
Connection method	Push-in connection
Connection technology	3-conductor
Note regarding the connection technology	shielded, 2-, 3-, and 4-conductor sensors can be connected
A/D converter resolution	16 bit
Sensor types (RTD) that can be used	Pt 1000 (IEC 60751/EN 60751)
Tolerance, relative	typ. 0.05 % (Measuring range: -200°C ... 400°C, based on the positive upper range value of 850°C)
	max. 0.15 % (Measuring range: -200°C ... 400°C, based on the positive upper range value of 850°C)
	typ. 0.15 % (Measuring range: -200°C ... 850°C, based on the positive upper range value of 850°C)
	max. 0.3 % (Measuring range: -200°C ... 850°C, based on the positive upper range value of 850°C)
Tolerance, absolute	see tables for tolerance values
Data formats	Standardized representation
Measured value representation	16 bits (15 bits + sign bit)
Nominal value of the current sources	1 mA (pulsed current, the data is valid during the sampling phase)
Process data update	typ. 1 ms
Protective circuit	Overload protection; max. ±40 V DC, 1 min.
	Transient protection

Product properties

Product type	I/O component
Product family	Axioline Smart Elements
Type	modular
Mounting position	See the system in which the Smart Element is used.
Special properties	The product is being prepared for compliance with the Cyber Resilience Act (CRA)

Insulation characteristics

Overvoltage category	II (IEC 60664-1, EN 60664-1)
Pollution degree	2 (IEC 60664-1, EN 60664-1)

Electrical properties

Maximum power dissipation for nominal condition	0.4 W

Potentials: Communications power supply of the Smart Elements (U_{SE})

Supply voltage	using card edge connectors

Potentials: I/O supply (U_P)

Supply voltage	24 V DC (using card edge connectors)
Supply voltage range	19.2 V DC ... 30 V DC (including all tolerances, including ripple)

Current draw	max. 12 mA
	typ. 8 mA
Current consumption	min. 5 mA (without connected peripherals)
Protective circuit	Surge protection; See the system in which the Smart Element is used.
	Reverse polarity protection; Polarity protection diode
Protection	See the system in which the Smart Element is used.

Electrical isolation/isolation of the voltage ranges

Test voltage: Communications supply / 24 V supply (I/O)	500 V AC, 50 Hz, 1 min
Test voltage: Communications supply / functional ground	500 V AC, 50 Hz, 1 min
Test voltage: 24 V supply (I/O) / functional ground	500 V AC, 50 Hz, 1 min

Connection data

Connection technology

Connection name	I/O
Note on the connection method	Please observe the information provided on conductor cross-sections in the “Axioline Smart Elements” user manual.

I/O

Connection method	Push-in connection
Note on the connection method	Please observe the information provided on conductor cross-sections in the “Axioline Smart Elements” user manual.
Conductor cross-section, rigid	0.25 mm² ... 1.5 mm²
Conductor cross-section, flexible	0.25 mm² ... 1.5 mm²
Conductor cross-section AWG	24 ... 16
Conductor cross-section, flexible, with ferrule, with plastic sleeve	0.25 mm² ... 1.5 mm²
Conductor cross-section, flexible, with ferrule, without plastic sleeve	0.25 mm² ... 1.5 mm²
	0.25 mm² ... 1.5 mm²
Conductor cross-section, flexible, with ferrule, with plastic sleeve	0.25 mm² ... 1.5 mm²
Stripping length	8 mm

Environmental and real-life conditions

Ambient conditions

Ambient temperature (operation)	-25 °C ... 60 °C
Degree of protection	IP20
Air pressure (operation)	70 kPa ... 106 kPa (up to 3000 m above sea level)
Air pressure (storage/transport)	70 kPa ... 106 kPa (up to 3000 m above sea level)
Ambient temperature (storage/transport)	-40 °C ... 85 °C
Permissible humidity (operation)	5 % ... 95 % (non-condensing)
Permissible humidity (storage/transport)	5 % ... 95 % (non-condensing)

Mechanical test

Vibration resistance in accordance with EN 60068-2-6/IEC 60068-2-6	5g
Shock in accordance with EN 60068-2-27/IEC 60068-2-27	30g

Continuous shock in accordance with EN 60068-2-27/IEC 60068-2-27	10g

Standards and regulations

Protection class	III (IEC 61140, EN 61140, VDE 0140-1)

Drawings

Dimensional drawing

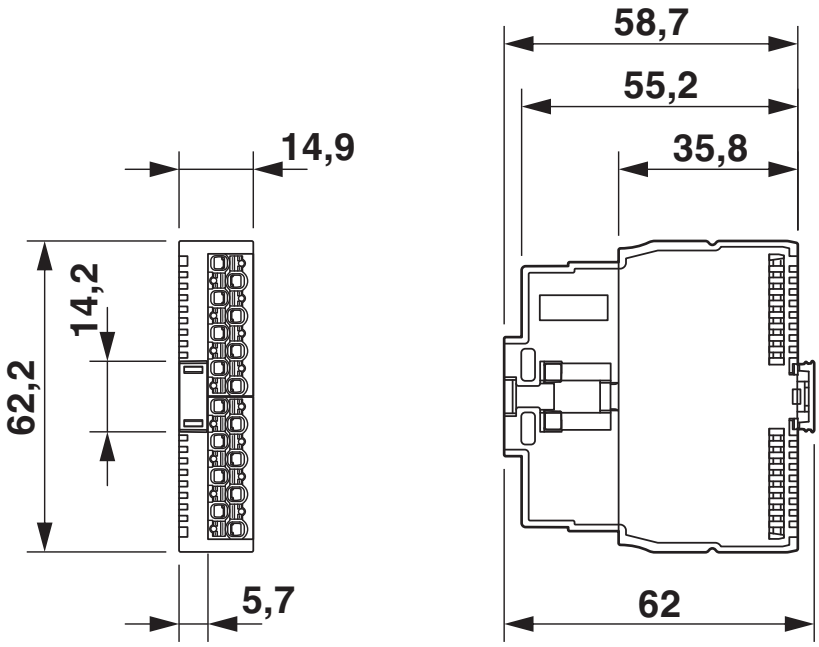

Dimensions

Connection diagram

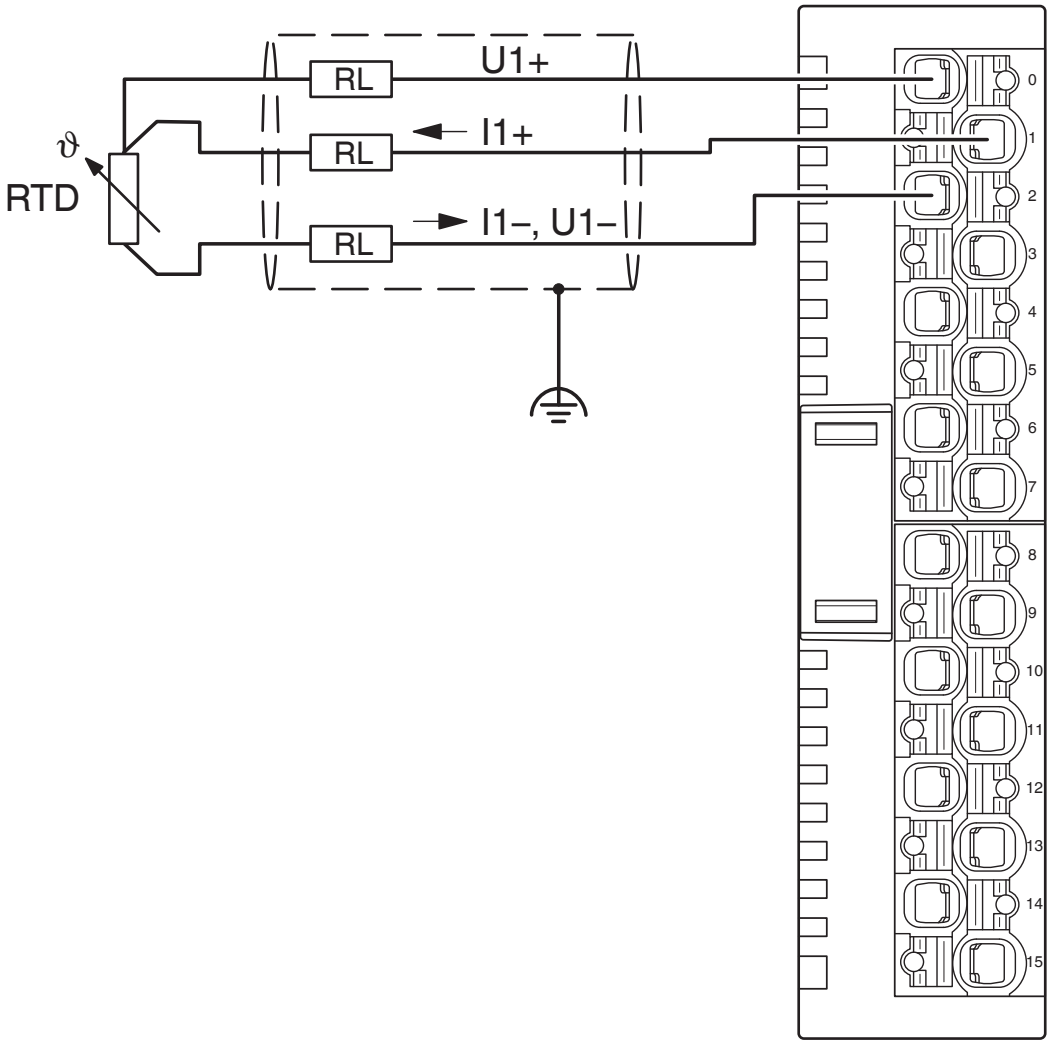

Connection example

Block diagram

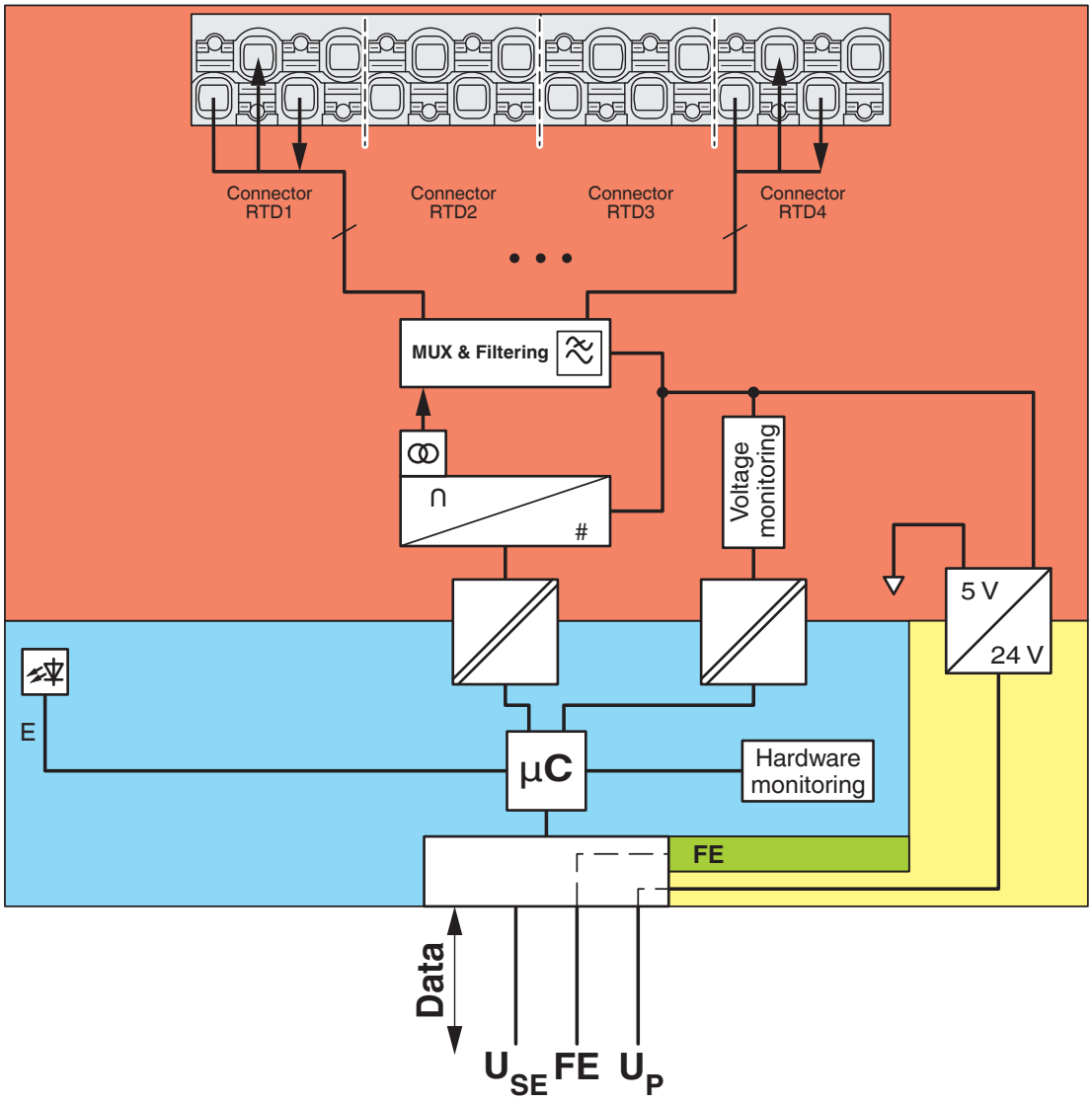

Internal wiring of the terminal points

Approvals

To download certificates, visit the product detail page: https://www.phoenixcontact.com/gb/products/1182190

cULus Listed
Approval ID: E238705

Classifications

ECLASS

ECLASS-13.0	27242601
ECLASS-15.0	27242601

ETIM

ETIM 10.0	EC001596

UNSPSC

UNSPSC 21.0	32151600

Environmental product compliance

EU RoHS

Fulfills EU RoHS substance requirements	Yes
Exemption	7(a), 7(c)-I, 7(c)-II

China RoHS

Environment friendly use period (EFUP)	EFUP-50
	An article-related China RoHS declaration table can be found in the download area for the respective article under "Manufacturer declaration". For all articles with EFUP-E, no China RoHS declaration table issued and required.

EU REACH SVHC

REACH candidate substance (CAS No.)	Lead(CAS: 7439-92-1)
SCIP	a9d2c0e3-9670-4937-80c6-0dc7e77a0155

EF3.1 Climate Change

CO2e kg	3.173 kg CO2e

Phoenix Contact 2026 © - all rights reserved
https://www.phoenixcontact.com

PHOENIX CONTACT Ltd
Halesfield 13, Telford
Shropshire, TF7 4PG
01952 681700
info@phoenixcontact.co.uk