AXL SE UTH4 EF - Temperature module

1182068

https://www.phoenixcontact.com/gb/products/1182068

Please be informed that the data shown in this PDF document is generated from our online catalog. Please find the complete data in the user documentation. Our general terms of use for downloads are valid.

CRA-READY



Axioline Smart Elements, Temperature recording module, Analog inputs: 4 (Inputs for thermocouples or linear voltage), connection technology: 2-conductor (shielded, twisted pair), External cold junction (can also be used as an additional Pt 100 sensor input): 1, connection technology: 4-conductor, degree of protection: IP20; The product is being prepared for compliance with the Cyber Resilience Act (CRA).

Product description

You can integrate Axioline Smart Elements into systems with the Smart Element interface. This Smart Element acquires signals from standard thermocouples in industrial applications. The Smart Element supports various types of thermocouple conforming to DIN EN 60584-1 and DIN 46710 as well as linear voltages from -100 mV to +100 mV. You can use the Pt 100 input as a sensor input or as an external cold junction.

Your advantages

- 4 analog input channels to connect thermocouples or linear voltages from -100 mV to +100 mV
- Connection of sensors in 2-conductor technology
- A Pt 100 sensor with 4-conductor technology can be connected as an external cold junction sensor or additional RTD measuring channel
- Internal detection and compensation of cold junction temperature (can be parameterized)
- Device rating plate stored

ELEKTROGERÄTE RÜCKNAHME

Commercial data

Item number	1182068
Packing unit	1 pc

Minimum order quantity	1 pc
Sales key	DRIB43
Product key	DRIB43
GTIN	4063151371005
Weight per piece (including packing)	40.75 g
Weight per piece (excluding packing)	38.05 g
Customs tariff number	85437090
Country of origin	DE

Technical data

Dimensions

Dimensional drawing	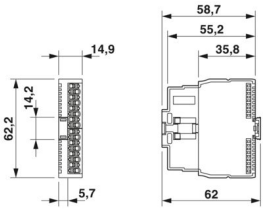
Width	14.9 mm
Height	62.2 mm
Depth	62 mm

Notes

Note on application	Only for industrial use
Note on application	As things stand now, we are preparing the product so that, as of December 11, 2027, it will comply with the requirements of the EU Cyber Resilience Act (CRA) based on the information currently available regarding the CRA.

Mounting

Mounting type	Plug-in mounting (Smart Element slot)
Mounting position	See the system in which the Smart Element is used.

Material specifications

Color (Housing)	gray (RAL 7042)

Interfaces

Smart Element interface

Number of interfaces	1
Connection method	Card edge connector
Start time until ready to operate	< 500 ms

System properties

Programming data

Process data channel	80 bit
Input address area	10 Byte
Output address area	10 Byte

Fieldbus data telegram (PROFIBUS)

Required parameter data	21 Byte
Required configuration data	6 Byte

Input data

Analog:

Input name	Analog inputs
Description of the input	Inputs for thermocouples or linear voltage
Number of inputs	4 (Inputs for thermocouples or linear voltage)
Connection method	Push-in connection
Connection technology	2-conductor (shielded, twisted pair)
Sensor types that can be used (TC)	B, C, E, J, K, L, N, R, S, T, U, W, HK, mV input
Tolerance, relative	typ. 0.01 % (Thermocouple type K, NiCr-Ni)
	see tables for tolerance values
Tolerance, absolute	typ. ± 0.27 K (Thermocouple type K, plus tolerance of cold junction)
	see tables for tolerance values
Measured value representation	16 bits (15 bits + sign bit)
Input filter time	40 ms
	60 ms
	100 ms
	120 ms (adjustable)
Protective circuit	Surge protection
	Transient protection

Analog:

Input name	External cold junction (can also be used as an additional Pt 100 sensor input)
Number of inputs	1
Connection method	Push-in connection
Connection technology	4-conductor
Sensor types (RTD) that can be used	Pt 100
Input filter time	120 ms

Product properties

Product type	I/O component
Product family	Axioline Smart Elements
Type	modular
Mounting position	See the system in which the Smart Element is used.
Special properties	The product is being prepared for compliance with the Cyber Resilience Act (CRA)

Insulation characteristics

Overvoltage category	II (IEC 60664-1, EN 60664-1)
Pollution degree	2 (IEC 60664-1, EN 60664-1)

Electrical properties

Maximum power dissipation for nominal condition	0.75 W

Potentials: Communications power supply of the Smart Elements (U_{SE})

Supply voltage	using card edge connectors

Potentials: I/O supply (U_P)

Supply voltage	24 V DC (using card edge connectors)
Supply voltage range	19.2 V DC ... 30 V DC (including all tolerances, including ripple)
Current draw	max. 28 mA
	typ. 22 mA
Current consumption	min. 16 mA (without connected peripherals)
Protective circuit	Surge protection; See the system in which the Smart Element is used.
	Reverse polarity protection; Polarity protection diode
Protection	See the system in which the Smart Element is used.

Electrical isolation/isolation of the voltage ranges

Test voltage: Communications supply / 24 V supply (I/O)	500 V AC, 50 Hz, 1 min
Test voltage: Communications supply / functional ground	500 V AC, 50 Hz, 1 min
Test voltage: 24 V supply (I/O) / functional ground	500 V AC, 50 Hz, 1 min

Connection data

Connection technology

Connection name	I/O
Note on the connection method	Please observe the information provided on conductor cross-sections in the “Axioline Smart Elements” user manual.

I/O

Connection method	Push-in connection
Note on the connection method	Please observe the information provided on conductor cross-sections in the “Axioline Smart Elements” user manual.
Conductor cross-section, rigid	0.25 mm² ... 1.5 mm²
Conductor cross-section, flexible	0.25 mm² ... 1.5 mm²
Conductor cross-section AWG	24 ... 16
Conductor cross-section, flexible, with ferrule, with plastic sleeve	0.25 mm² ... 1.5 mm²
Conductor cross-section, flexible, with ferrule, without plastic sleeve	0.25 mm² ... 1.5 mm²
	0.25 mm² ... 1.5 mm²
Conductor cross-section, flexible, with ferrule, with plastic sleeve	0.25 mm² ... 1.5 mm²
Stripping length	8 mm

Environmental and real-life conditions

Ambient conditions

Ambient temperature (operation)	-25 °C ... 60 °C
Degree of protection	IP20
Air pressure (operation)	70 kPa ... 106 kPa (up to 3000 m above sea level)
Air pressure (storage/transport)	70 kPa ... 106 kPa (up to 3000 m above sea level)
Ambient temperature (storage/transport)	-40 °C ... 85 °C
Permissible humidity (operation)	5 % ... 95 % (non-condensing)
Permissible humidity (storage/transport)	5 % ... 95 % (non-condensing)

Mechanical test

Vibration resistance in accordance with EN 60068-2-6/IEC 60068-2-6	5g
Shock in accordance with EN 60068-2-27/IEC 60068-2-27	30g
Continuous shock in accordance with EN 60068-2-27/IEC 60068-2-27	10g

Standards and regulations

Protection class	III (IEC 61140, EN 61140, VDE 0140-1)

Drawings

Dimensional drawing

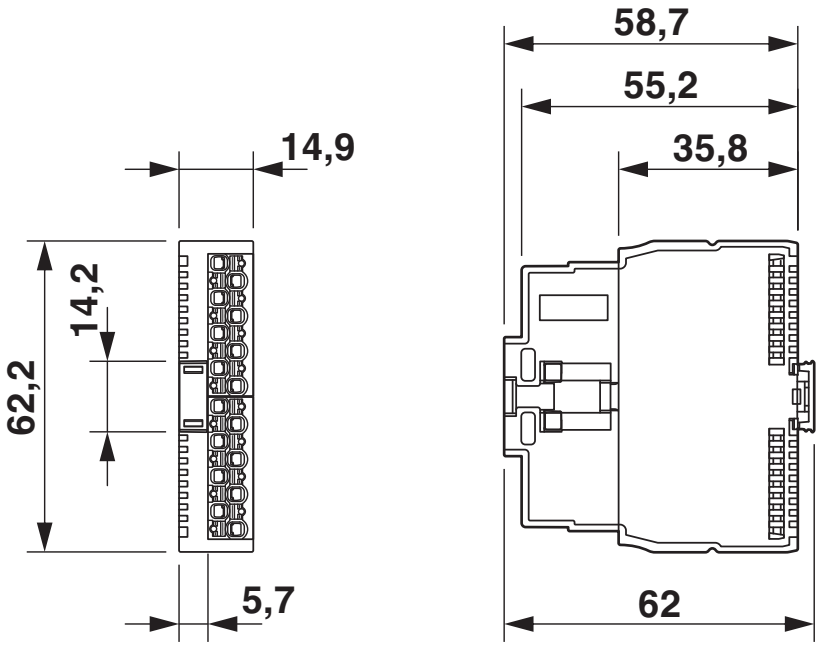

Dimensions

Connection diagram

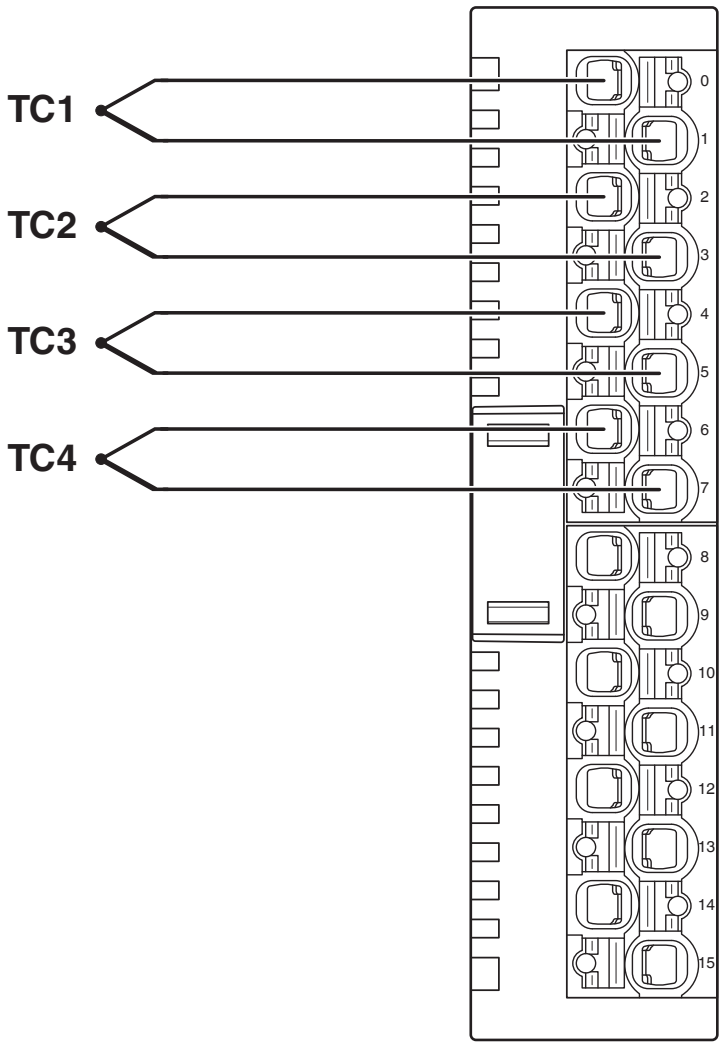

Connection example: absolute temperature measurement

Connection diagram

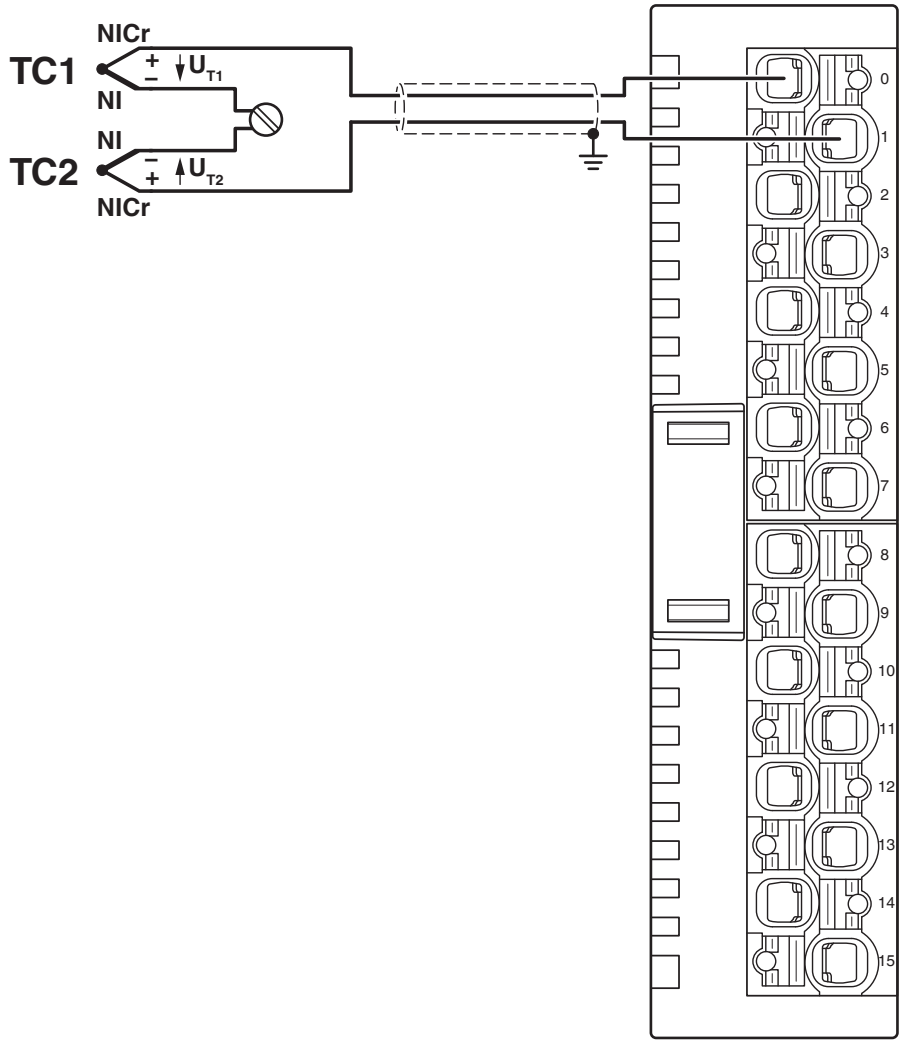

Differential temperature measurement

Connection diagram

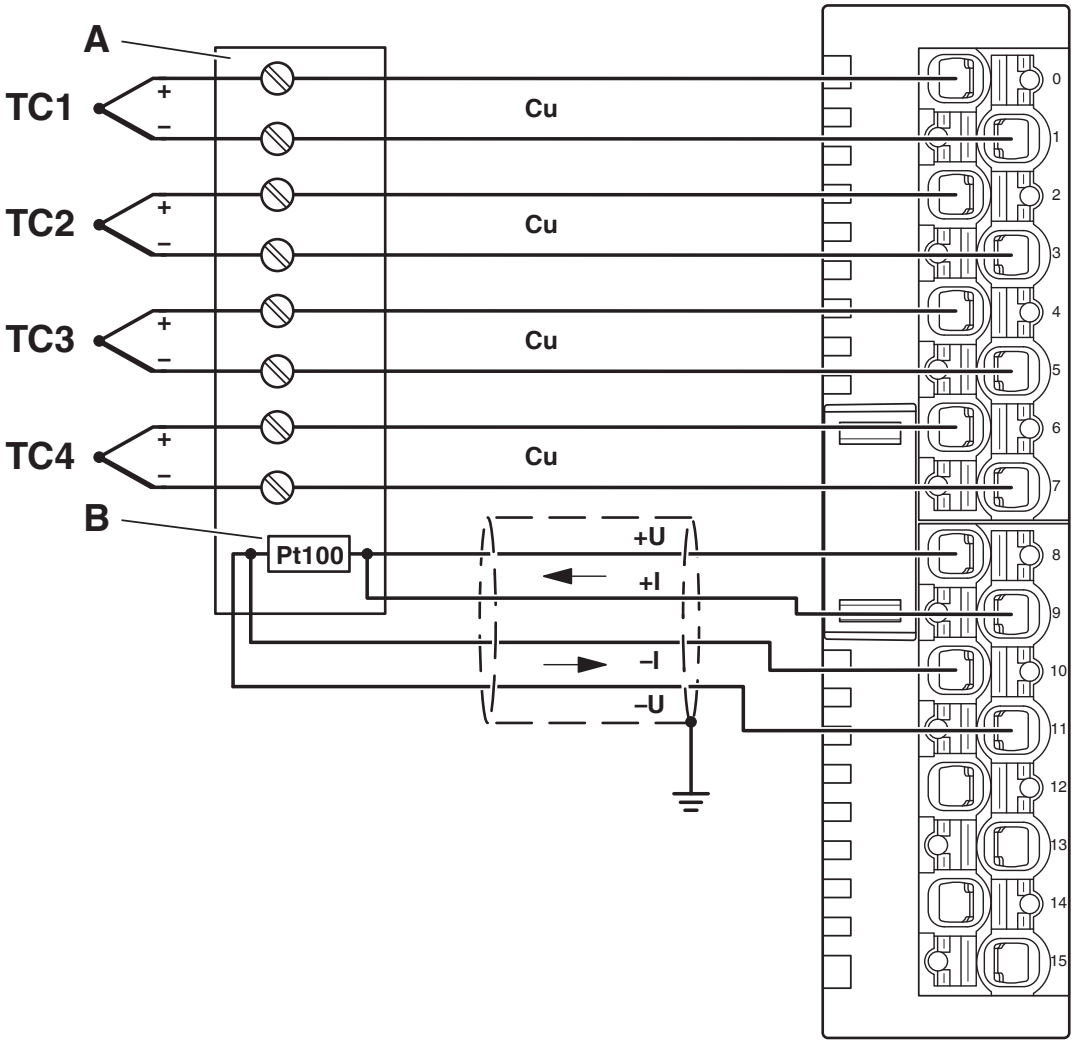

Thermocouple detection with external cold junction compensation at channel 1

Connection diagram

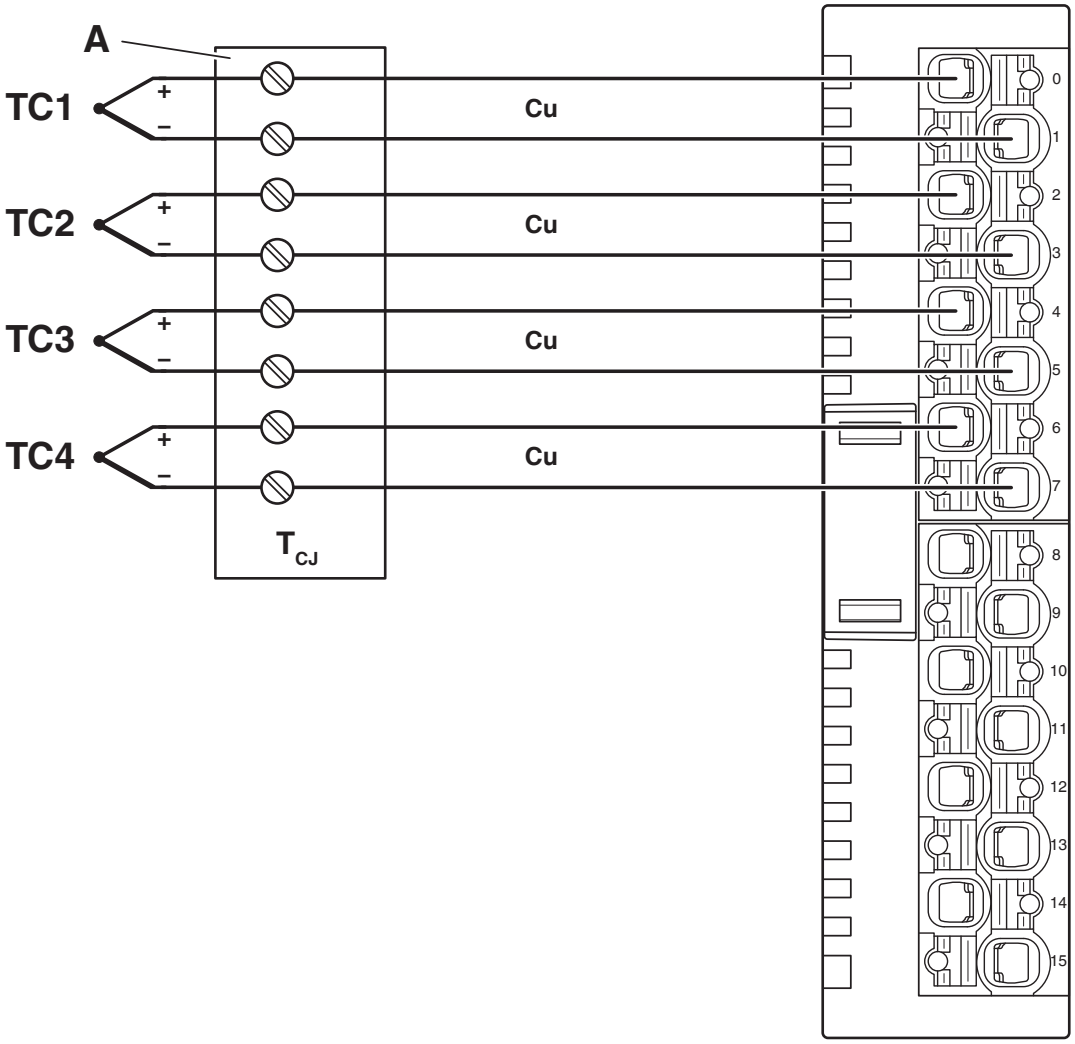

Thermocouple detection with cold junction temperature specification via process data

Connection diagram

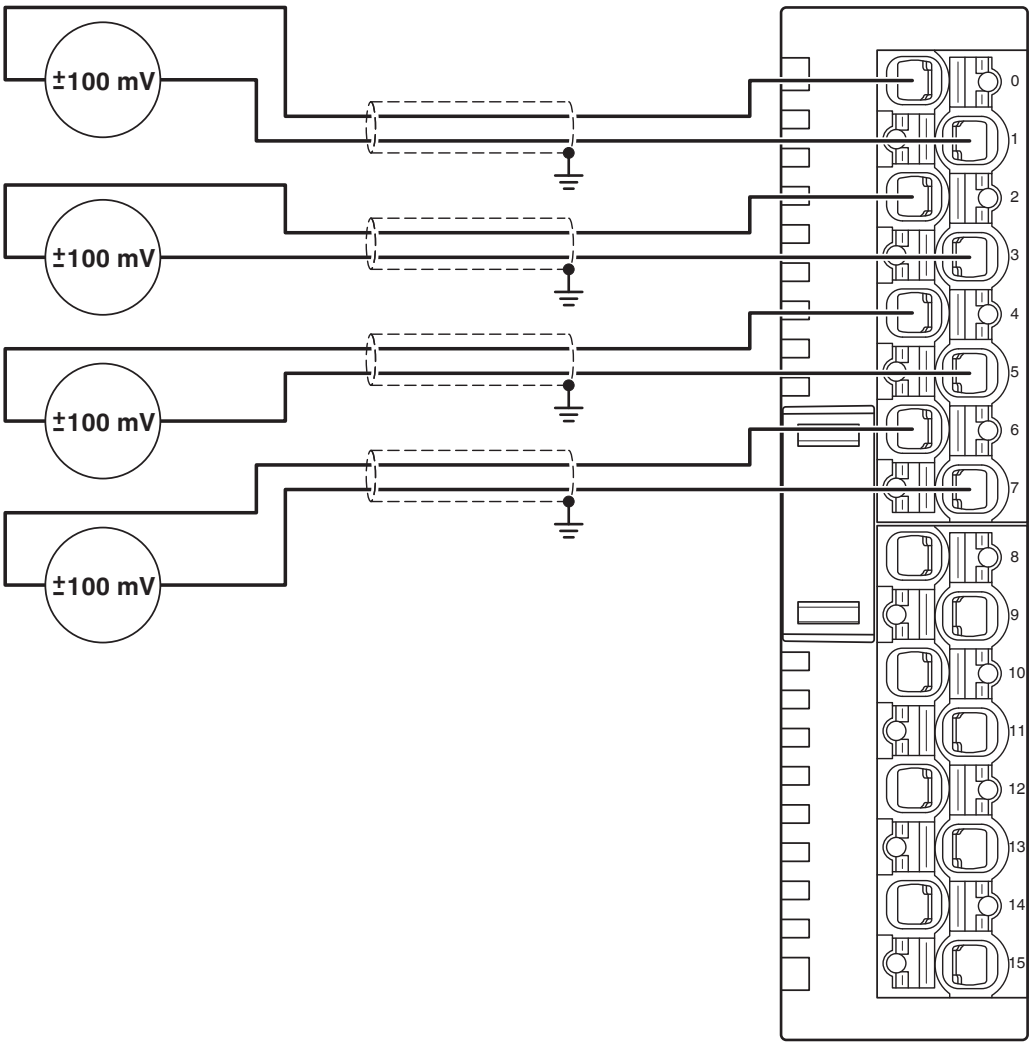

Measurement of linear voltages ±100 mV

Connection diagram

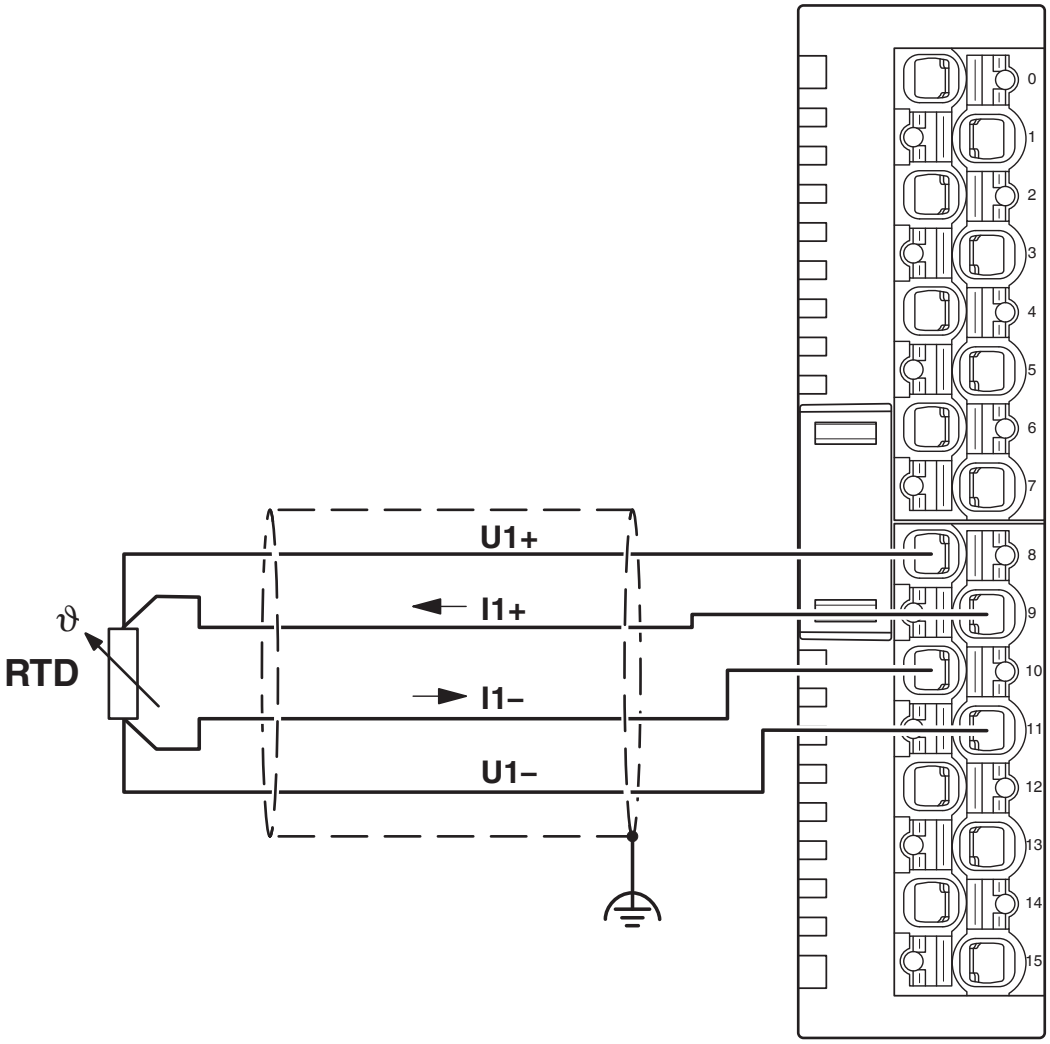

Pt 100 detection

Block diagram

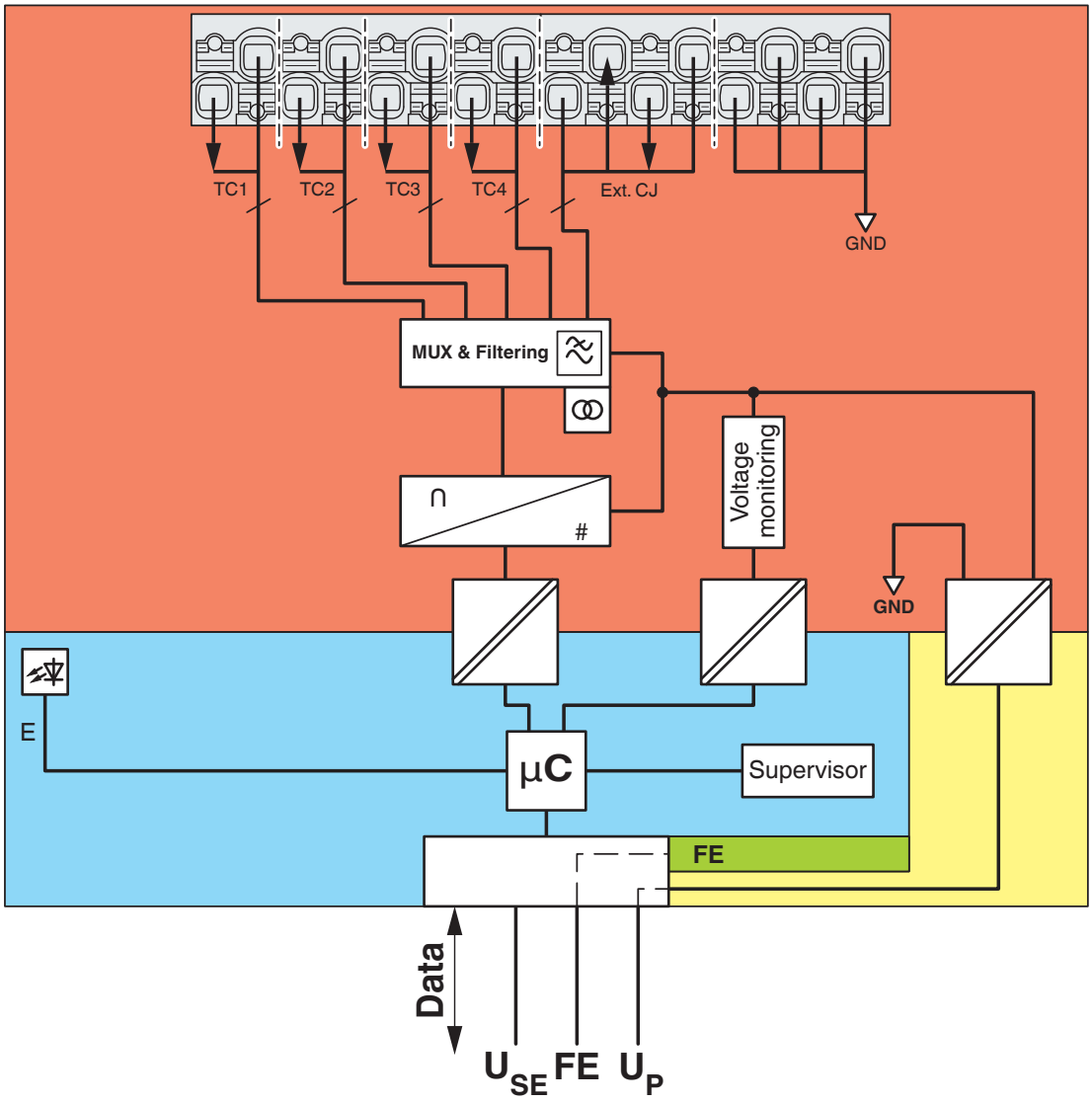

Internal wiring of the terminal points

Approvals

To download certificates, visit the product detail page: https://www.phoenixcontact.com/gb/products/1182068

cULus Listed
Approval ID: E238705

Classifications

ECLASS

ECLASS-13.0	27242601
ECLASS-15.0	27242601

ETIM

ETIM 10.0	EC001596

UNSPSC

UNSPSC 21.0	32151600

Environmental product compliance

EU RoHS

Fulfills EU RoHS substance requirements	Yes
Exemption	7(a), 7(c)-I, 7(c)-II

EU REACH SVHC

REACH candidate substance (CAS No.)	Lead(CAS: 7439-92-1)
SCIP	4620093b-64a4-4650-9de3-5faee94a7b21

EF3.1 Climate Change

CO2e kg	6.962 kg CO2e

Phoenix Contact 2026 © - all rights reserved
https://www.phoenixcontact.com

PHOENIX CONTACT Ltd
Halesfield 13, Telford
Shropshire, TF7 4PG
01952 681700
info@phoenixcontact.co.uk