AXL SE DO4/2 2A EF - Digital module

1181790

https://www.phoenixcontact.com/gb/products/1181790

Please be informed that the data shown in this PDF document is generated from our online catalog. Please find the complete data in the user documentation. Our general terms of use for downloads are valid.

CRA-READY



Axioline Smart Elements, Digital output module, Digital outputs: 4, 24 V DC, 2 A, connection technology: 2-conductor, degree of protection: IP20; The product is being prepared for compliance with the Cyber Resilience Act (CRA).

Product description

You can integrate Axioline Smart Elements into systems with the Smart Element interface. This Smart Element emits digital signals.

Your advantages

- 4 digital outputs
- 24 V DC, 2 A
- Connection of actuators in 2-conductor technology
- Substitute value behavior of the outputs can be parameterized for the Smart Element
- Feed-in of the I/O supply on the Smart Element
- Single-channel diagnostics
- Mapping of the channel status in the input process data
- Device rating plate stored

ELEKTROGERÄTE RÜCKNAHME

Commercial data

Item number	1181790
Packing unit	1 pc
Minimum order quantity	1 pc
Sales key	DRIB32
Product key	DRIB32
GTIN	4063151359430
Weight per piece (including packing)	38.1 g
Weight per piece (excluding packing)	38.2 g
Customs tariff number	85389091
Country of origin	DE

Technical data

Dimensions

Dimensional drawing	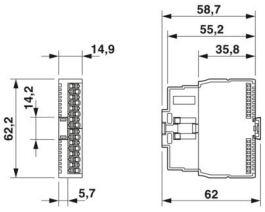
Width	14.9 mm
Height	62.2 mm
Depth	62 mm

Notes

Note on application	Only for industrial use
Note on application	As things stand now, we are preparing the product so that, as of December 11, 2027, it will comply with the requirements of the EU Cyber Resilience Act (CRA) based on the information currently available regarding the CRA.

Mounting

Mounting type	Plug-in mounting (Smart Element slot)
Mounting position	See the system in which the Smart Element is used.

Material specifications

Color (Housing)	gray (RAL 7042)

Interfaces

Smart Element interface

Number of interfaces	1
Connection method	Card edge connector
Start time until ready to operate	< 500 ms

System properties

Programming data

Process data channel	8 bit
Input address area	1 Byte
Output address area	1 Byte

Fieldbus data telegram (PROFIBUS)

Required parameter data	3 Byte
Required configuration data	7 Byte

Output data

Digital:

Output name	Digital outputs
Design of digital output	Semiconductor
Connection method	Push-in connection
Connection technology	2-conductor
Number of outputs	4
Protective circuit	Short-circuit and overload protection; electronic
Output voltage	24 V DC
Max. current carrying capacity per output	max. 2 A (Observe the derating.)
Maximum output current per module	max. 8 A (provide external fuse protection; observe the derating.)
Nominal output voltage	24 V DC
Load min.	10 kΩ
Output voltage when switched off	max. 1 V
Output current when switched off	max. 300 µA
Nominal load, inductive	48 VA (1.2 H, 12 Ω, at 24 V DC)
Nominal load, lamp	24 W (at 24 V DC)
Nominal load, ohmic	48 W (12 Ω, in the supply voltage range)
Behavior with overload	Shutdown with automatic restart
Behavior with inductive overload	Output can be destroyed
Switching frequency	max. 1200 per second (With resistive load, at least 50 mA load current)
	max. 1 per second (with inductive load)
	max. 4 per second (with nominal lamp load)
Signal delay	max. 100 µs (when switched on)
	max. 100 µs (when switched off, with at least 50 mA load current)
Overcurrent shut-down	min. 2.8 A
Output current with ground connection interrupt when switched off	< 1 mA

Product properties

Product type	I/O component
Product family	Axioline Smart Elements
Type	modular
Mounting position	See the system in which the Smart Element is used.
Special properties	The product is being prepared for compliance with the Cyber Resilience Act (CRA)

Insulation characteristics

Overvoltage category	II (IEC 60664-1, EN 60664-1)
Pollution degree	2 (IEC 60664-1, EN 60664-1)

Electrical properties

Maximum power dissipation for nominal condition	2.05 W

Potentials: I/O supply (U_O)

Supply voltage	24 V DC
Supply voltage range	19.2 V DC ... 30 V DC (including all tolerances, including ripple)
Current draw	max. 8 A (provide external protection)
Current consumption	min. 12 mA (without actuators)
Protective circuit	Surge protection; electronic (35 V, 0.5 s)
	Reverse polarity protection; parallel diode
Protection	max. 8 A (polarity reversal protection up to 5 A)

Potentials: Communications power supply of the Smart Elements (U_{SE})

Supply voltage	using card edge connectors

Electrical isolation/isolation of the voltage ranges

Test voltage: Communications power supply / 24 V supply U_O (I/O)	500 V AC, 50 Hz, 1 min
Test voltage: Communications power supply / 24 V supply U_P	500 V AC, 50 Hz, 1 min
Test voltage: Communications supply / functional ground	500 V AC, 50 Hz, 1 min
Test voltage: 24 V supply U_O (I/O) / 24 V supply U_P	500 V AC, 50 Hz, 1 min
Test voltage: 24 V supply U_O (I/O) / functional ground	500 V AC, 50 Hz, 1 min
Test voltage: 24 V supply U_P / functional ground	500 V AC, 50 Hz, 1 min

Connection data

Connection technology

Connection name	I/O
Note on the connection method	Please observe the information provided on conductor cross-sections in the “Axioline Smart Elements” user manual.

I/O

Connection method	Push-in connection
Note on the connection method	Please observe the information provided on conductor cross-sections in the “Axioline Smart Elements” user manual.
Conductor cross-section, rigid	0.25 mm² ... 1.5 mm²
Conductor cross-section, flexible	0.25 mm² ... 1.5 mm²
Conductor cross-section AWG	24 ... 16
Conductor cross-section, flexible, with ferrule, with plastic sleeve	0.25 mm² ... 1.5 mm²
Conductor cross-section, flexible, with ferrule, without plastic sleeve	0.25 mm² ... 1.5 mm²
	0.25 mm² ... 1.5 mm²
Conductor cross-section, flexible, with ferrule, with plastic sleeve	0.25 mm² ... 1.5 mm²
Stripping length	8 mm

Environmental and real-life conditions

Ambient conditions

Ambient temperature (operation)	-25 °C ... 60 °C
Degree of protection	IP20
Air pressure (operation)	70 kPa ... 106 kPa (up to 3000 m above sea level)
Air pressure (storage/transport)	70 kPa ... 106 kPa (up to 3000 m above sea level)

Ambient temperature (storage/transport)	-40 °C ... 85 °C
Permissible humidity (operation)	5 % ... 95 % (non-condensing)
Permissible humidity (storage/transport)	5 % ... 95 % (non-condensing)

Mechanical test

Vibration resistance in accordance with EN 60068-2-6/IEC 60068-2-6	5g
Shock in accordance with EN 60068-2-27/IEC 60068-2-27	30g
Continuous shock in accordance with EN 60068-2-27/IEC 60068-2-27	10g

Standards and regulations

Protection class	III (IEC 61140, EN 61140, VDE 0140-1)

Drawings

Dimensional drawing

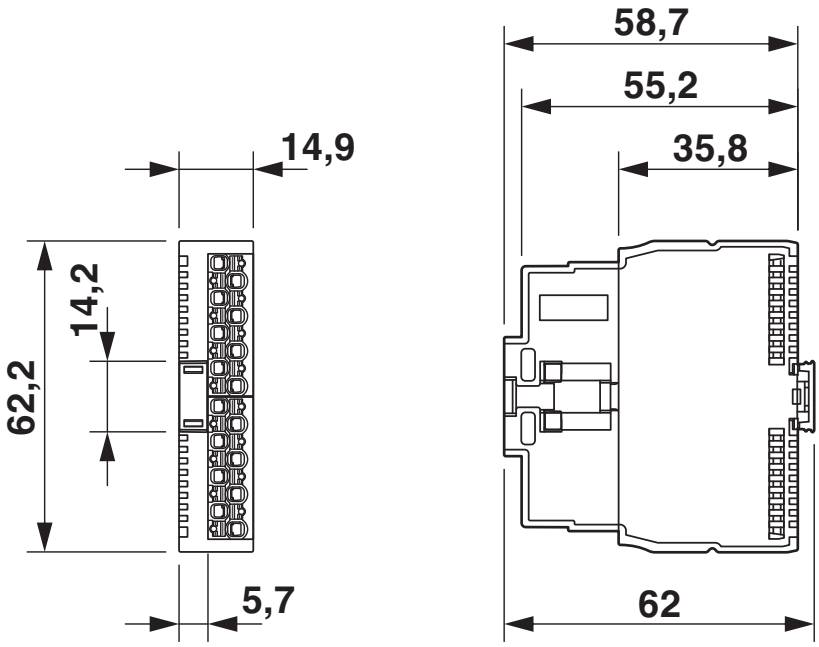

Dimensions (in mm)

Connection diagram

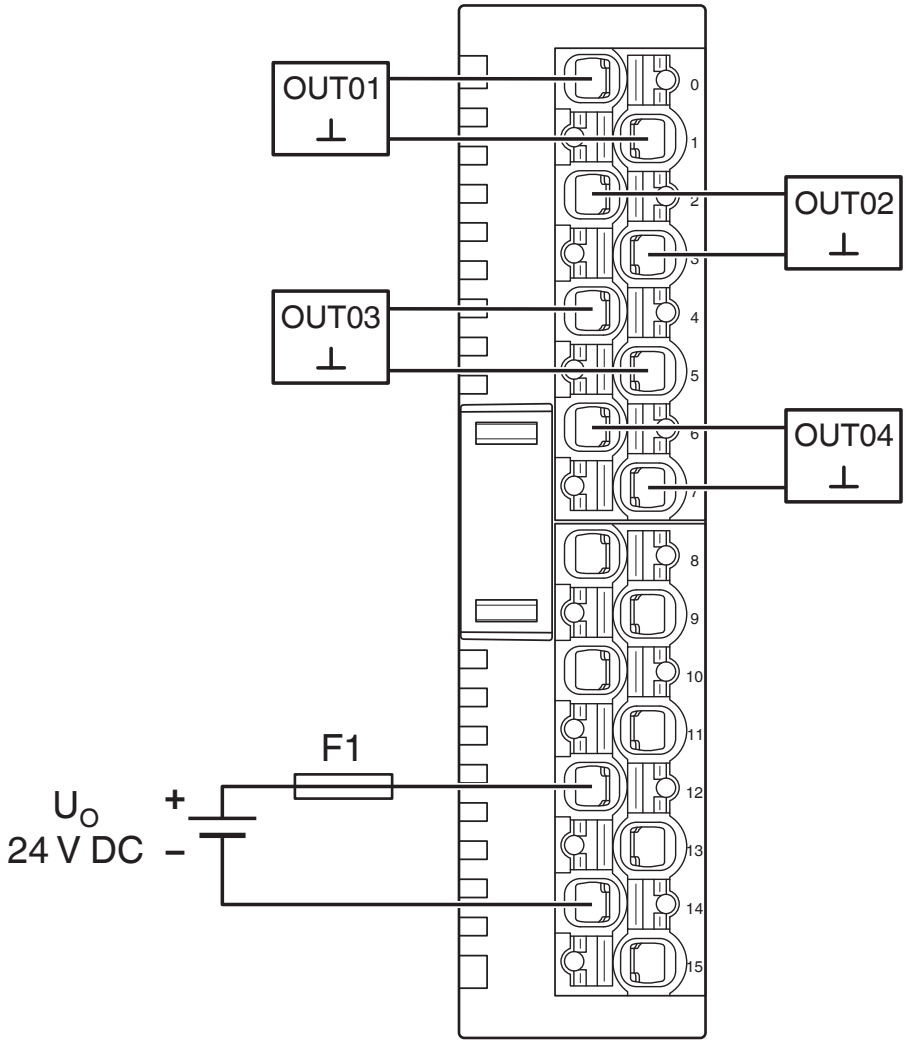

Connection in 2-conductor technology

Diagram

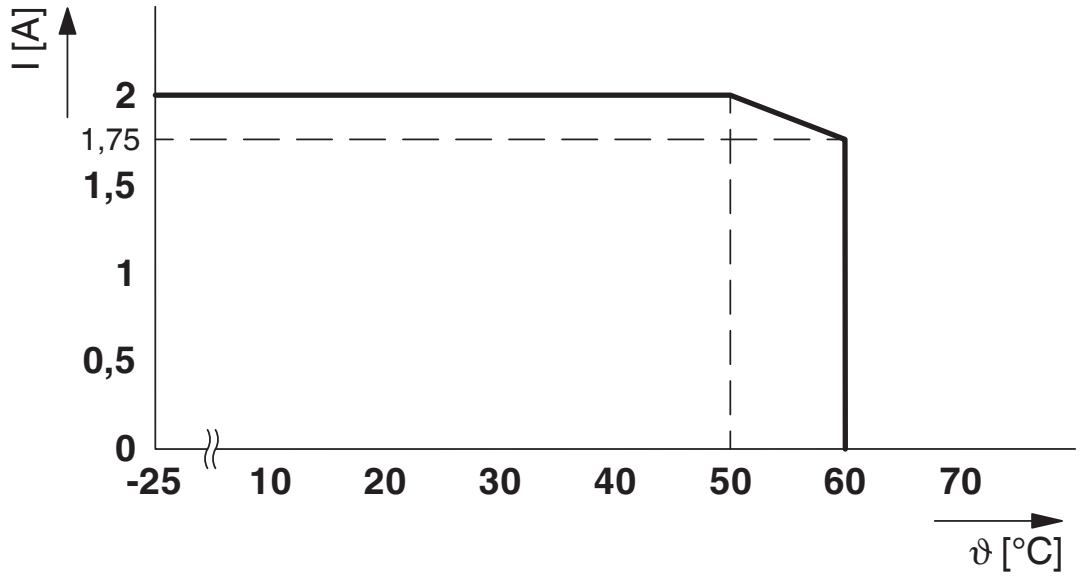

Derating at 100 % simultaneity

Block diagram

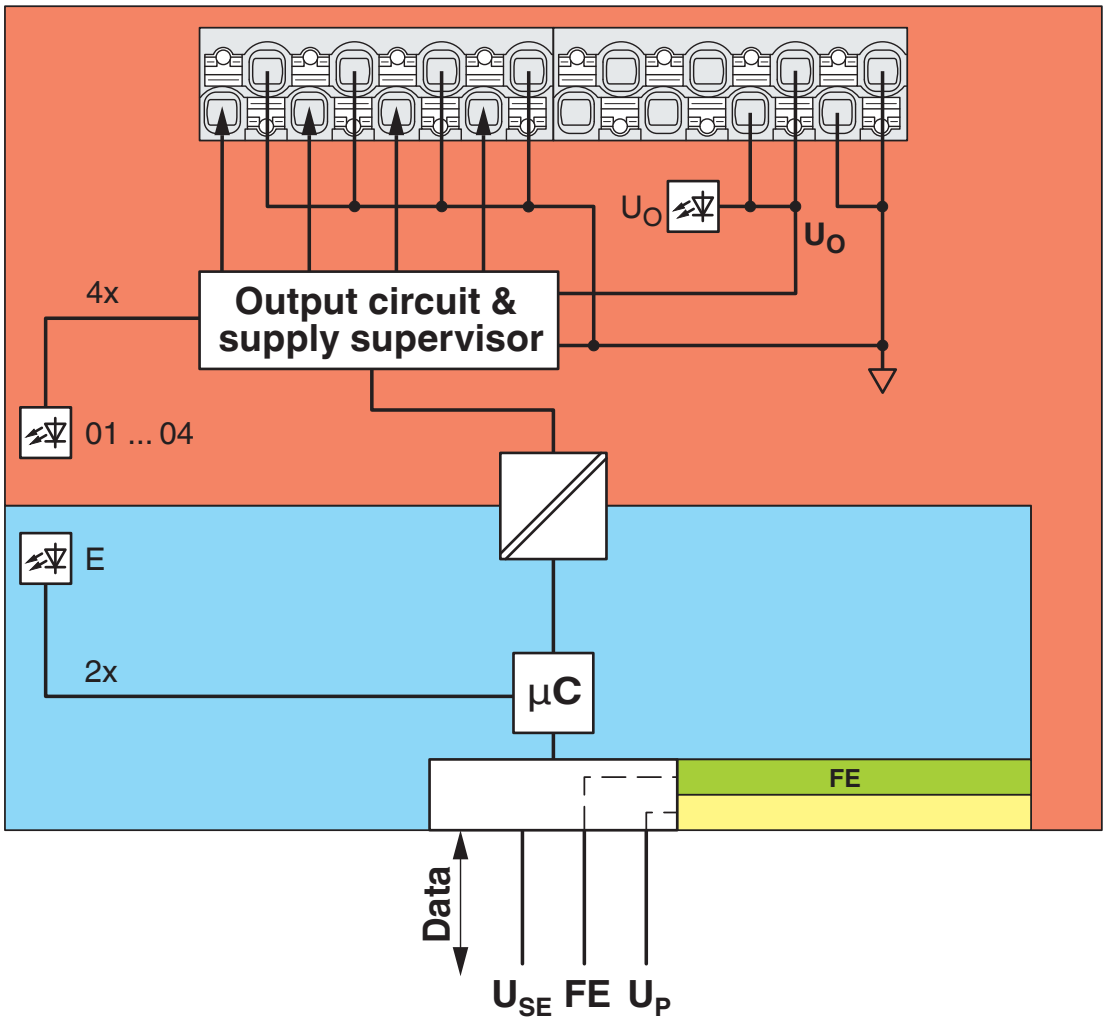

Internal wiring of the terminal points

Approvals

To download certificates, visit the product detail page: https://www.phoenixcontact.com/gb/products/1181790

cULus Listed
Approval ID: E238705

Classifications

ECLASS

ECLASS-13.0	27242604
ECLASS-15.0	27242604

ETIM

ETIM 10.0	EC001599

UNSPSC

UNSPSC 21.0	32151600

Environmental product compliance

EU RoHS

Fulfills EU RoHS substance requirements	Yes
Exemption	7(a), 7(c)-I

China RoHS

Environment friendly use period (EFUP)	EFUP-50
	An article-related China RoHS declaration table can be found in the download area for the respective article under "Manufacturer declaration". For all articles with EFUP-E, no China RoHS declaration table issued and required.

EU REACH SVHC

REACH candidate substance (CAS No.)	Lead(CAS: 7439-92-1)
SCIP	4108ee54-b82c-43ac-8372-2a6c8e6c42ee

EF3.1 Climate Change

CO2e kg	4.062 kg CO2e

Phoenix Contact 2026 © - all rights reserved
https://www.phoenixcontact.com

PHOENIX CONTACT Ltd
Halesfield 13, Telford
Shropshire, TF7 4PG
01952 681700
info@phoenixcontact.co.uk