AXL SE RS232 - Communication module

1181787

https://www.phoenixcontact.com/gb/products/1181787

Please be informed that the data shown in this PDF document is generated from our online catalog. Please find the complete data in the user documentation. Our general terms of use for downloads are valid.



Axioline Smart Elements, Communication module, Serial data transmission, Communication module; Process data width: 20 bytes, Transparent protocol; interface: RS-232: 1; Transmission speed: 100 bps ... 230400 bps; degree of protection: IP20; The product is being prepared for compliance with the Cyber Resilience Act (CRA).

Product description

You can integrate Axioline Smart Elements into systems with the Smart Element interface. This Smart Element is used to operate standard I/O devices with a serial interface on a bus system.

Your advantages

- One serial RS-232 input and output channel
- Data is transmitted in transparent mode
- Transmission speed can be set up to 230,400 bps
- Number of data bits, stop bits and parity can be set
- Device rating plate stored

Commercial data

Item number	1181787
Packing unit	1 pc

Minimum order quantity	1 pc
Sales key	DRIB51
Product key	DRIB51
GTIN	4063151618056
Weight per piece (including packing)	34.8 g
Weight per piece (excluding packing)	34.97 g
Customs tariff number	85176200
Country of origin	DE

Technical data

Dimensions

Dimensional drawing	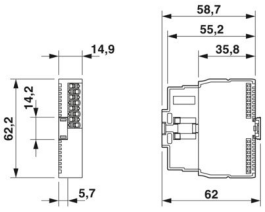
Width	14.9 mm
Height	62.2 mm
Depth	62 mm

Notes

Note on application	Only for industrial use
Note on application	As things stand now, we are preparing the product so that, as of December 11, 2027, it will comply with the requirements of the EU Cyber Resilience Act (CRA) based on the information currently available regarding the CRA.

Mounting

Mounting type	Plug-in mounting (Smart Element slot)
Mounting position	See the system in which the Smart Element is used.

Material specifications

Color (Housing)	gray (RAL 7042)

Interfaces

Smart Element interface

Number of interfaces	1
Connection method	Card edge connector
Start time until ready to operate	< 500 ms

RS-232

Number of interfaces	1
Connection method	Push-in connection
Note on the connection method	Use shielded cables. Connect both ends of the shield.
Transmission speed	100 bps ... 230400 bps (can be parameterized)
Transmission physics	Copper
Protocol	Transparent
Input buffer	4 kByte
Output buffer	1 kByte
Data bits	7 or 8
Stop bits	1 or 2

Parity	Even, odd or no parity

System properties

Programming data

Process data channel	160 bit
Input address area	20 Byte
Output address area	20 Byte

Fieldbus data telegram (PROFIBUS)

Required parameter data	11 Byte
Required configuration data	7 Byte

Product properties

Product type	I/O component
Product family	Axioline Smart Elements
Type	modular
Mounting position	See the system in which the Smart Element is used.
Special properties	The product is being prepared for compliance with the Cyber Resilience Act (CRA)
	Process data width: 20 bytes
	Transparent protocol

Insulation characteristics

Overvoltage category	II (IEC 60664-1, EN 60664-1)
Pollution degree	2 (IEC 60664-1, EN 60664-1)

Electrical properties

Maximum power dissipation for nominal condition	0.3 W

Potentials: Communications power supply of the Smart Elements (U_{SE})

Supply voltage	using card edge connectors

Potentials: I/O supply (U_P)

Supply voltage	24 V DC (using card edge connectors)
Supply voltage range	19.2 V DC ... 30 V DC (including all tolerances, including ripple)
Current draw	max. 9 mA
	typ. 7 mA
Current consumption	min. 6 mA (without connected peripherals)
Protective circuit	Surge protection; See the system in which the Smart Element is used.
	Reverse polarity protection; Polarity protection diode
Protection	See the system in which the Smart Element is used.

Electrical isolation/isolation of the voltage ranges

Test voltage: Communications supply / 24 V supply (I/O)	500 V AC, 50 Hz, 1 min
Test voltage: Logic supply / RS-232 interface	500 V AC, 50 Hz, 1 min
Test voltage: Communications supply / functional ground	500 V AC, 50 Hz, 1 min

Test voltage: 24 V supply (I/O) / RS-232 interface	500 V AC, 50 Hz, 1 min
Test voltage: 24 V supply (I/O) / functional ground	500 V AC, 50 Hz, 1 min
Test voltage: RS-232 interface/functional ground	500 V AC, 50 Hz, 1 min

Connection data

Connection technology

Connection name	I/O
Note on the connection method	Please observe the information provided on conductor cross-sections in the “Axioline Smart Elements” user manual.

I/O

Connection method	Push-in connection
Note on the connection method	Please observe the information provided on conductor cross-sections in the “Axioline Smart Elements” user manual.
Conductor cross-section, rigid	0.25 mm² ... 1.5 mm²
Conductor cross-section, flexible	0.25 mm² ... 1.5 mm²
Conductor cross-section AWG	24 ... 16
Conductor cross-section, flexible, with ferrule, with plastic sleeve	0.25 mm² ... 1.5 mm²
Conductor cross-section, flexible, with ferrule, without plastic sleeve	0.25 mm² ... 1.5 mm² 0.25 mm² ... 1.5 mm²
Conductor cross-section, flexible, with ferrule, with plastic sleeve	0.25 mm² ... 1.5 mm²
Stripping length	8 mm

Environmental and real-life conditions

Ambient conditions

Ambient temperature (operation)	-25 °C ... 60 °C
Degree of protection	IP20
Air pressure (operation)	70 kPa ... 106 kPa (up to 3000 m above sea level)
Air pressure (storage/transport)	70 kPa ... 106 kPa (up to 3000 m above sea level)
Ambient temperature (storage/transport)	-40 °C ... 85 °C
Permissible humidity (operation)	5 % ... 95 % (non-condensing)
Permissible humidity (storage/transport)	5 % ... 95 % (non-condensing)

Mechanical test

Vibration resistance in accordance with EN 60068-2-6/IEC 60068-2-6	5g
Shock in accordance with EN 60068-2-27/IEC 60068-2-27	30g
Continuous shock in accordance with EN 60068-2-27/IEC 60068-2-27	10g

Standards and regulations

Protection class	III (IEC 61140, EN 61140, VDE 0140-1)

Drawings

Dimensional drawing

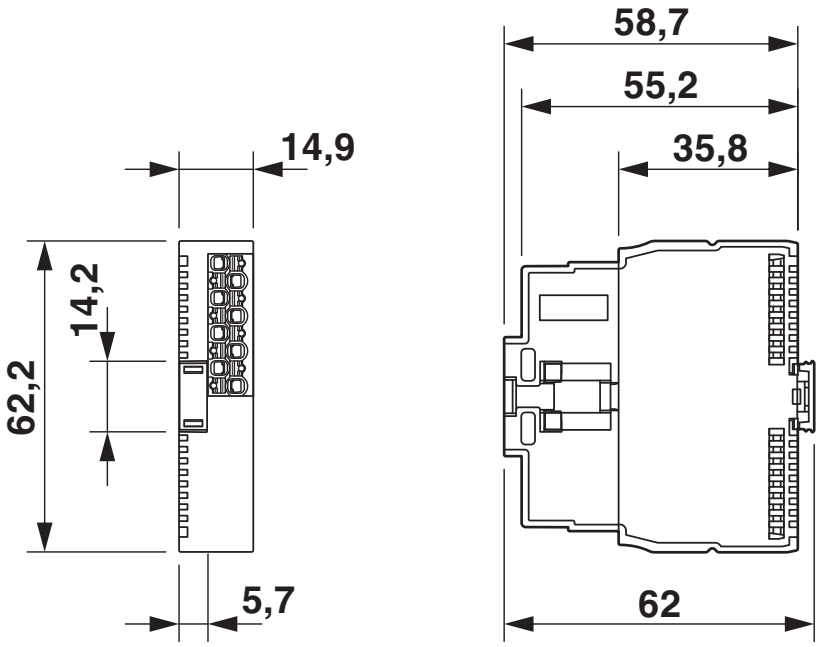

Dimensions (in mm)

Connection diagram

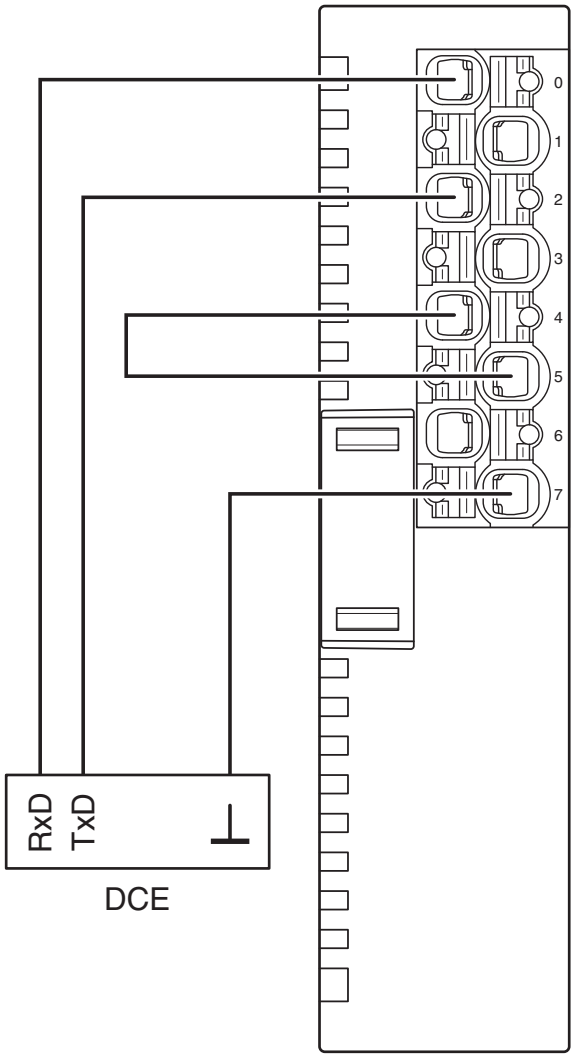

Wiring without handshake

Connection diagram

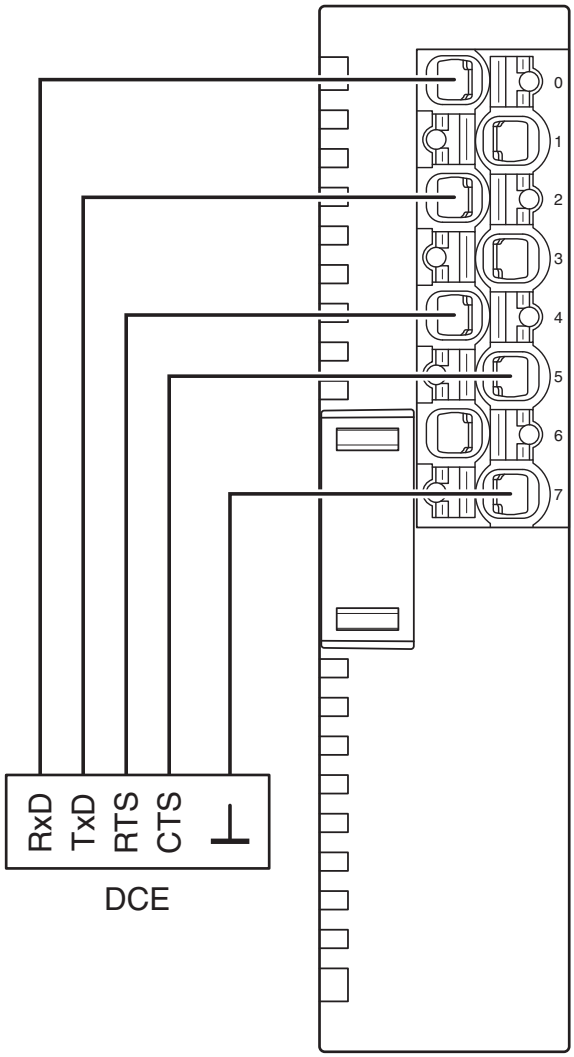

Wiring with handshake

Block diagram

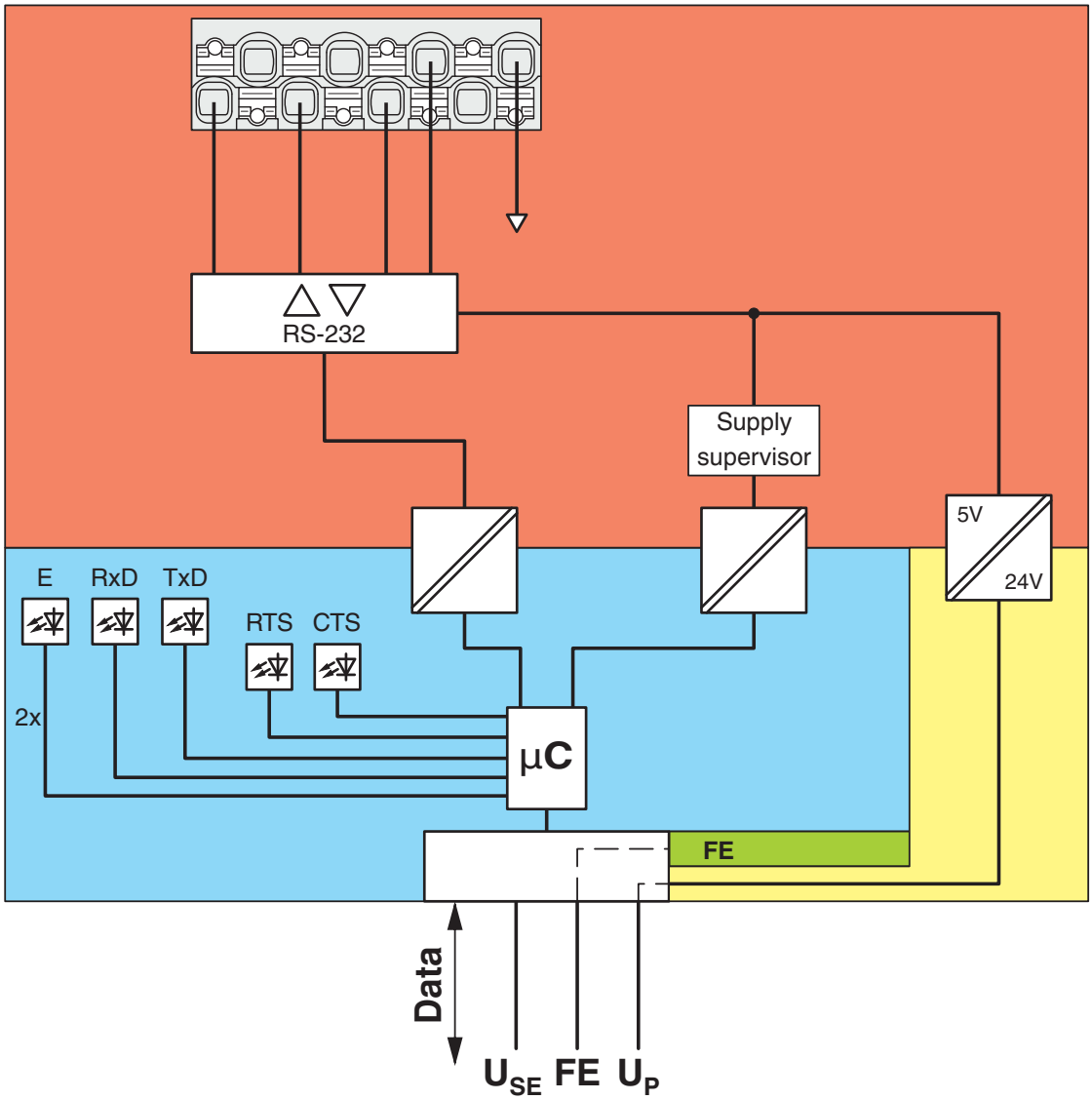

Internal wiring of the terminal points

Approvals

To download certificates, visit the product detail page: https://www.phoenixcontact.com/gb/products/1181787

cULus Listed
Approval ID: E238705

Classifications

ECLASS

ECLASS-13.0	27242608
ECLASS-15.0	27242608

ETIM

ETIM 10.0	EC001604

UNSPSC

UNSPSC 21.0	32151600

Environmental product compliance

EU RoHS

Fulfills EU RoHS substance requirements	Yes
Exemption	7(a), 7(c)-I

China RoHS

Environment friendly use period (EFUP)	EFUP-50
	An article-related China RoHS declaration table can be found in the download area for the respective article under "Manufacturer declaration". For all articles with EFUP-E, no China RoHS declaration table issued and required.

EU REACH SVHC

REACH candidate substance (CAS No.)	Lead(CAS: 7439-92-1)

Phoenix Contact 2026 © - all rights reserved
https://www.phoenixcontact.com

PHOENIX CONTACT Ltd
Halesfield 13, Telford
Shropshire, TF7 4PG
01952 681700
info@phoenixcontact.co.uk