TRIO-PS-2G/230AC-400DC/48DC/5 - Power supply

1157806

https://www.phoenixcontact.com/gb/products/1157806

Please be informed that the data shown in this PDF document is generated from our online catalog. Please find the complete data in the user documentation. Our general terms of use for downloads are valid.



Primary-switched TRIO power supply for DIN rail mounting, input: 230 V AC/400 V DC, output: 48.5 V DC / 5 A, dynamic boost, tool-free fast-connection technology for rigid and flexible conductors with ferrule

Product description

The TRIO POWER power supply with an input voltage of 230 V AC - 400 V DC features a wide input voltage range, parallel mode, high power density, and an extremely robust electrical and mechanical design. It is therefore ideal for infrastructure conversion, e.g., in railway technology.

Your advantages

- Voltage range for new DC applications
- High power density
- Improved load distribution
- Very cost-effective with time-saving, tool-free Push-in connection and a slim design
- Electrically robust, thanks to high electric strength
- Mechanically robust, thanks to high vibration and shock resistance

ELEKTROGERÄTE RÜCKNAHME

Commercial data

Item number	1157806
Packing unit	1 pc
Minimum order quantity	1 pc
Sales key	CMPO14
Product key	CMPO14
GTIN	4063151162887
Weight per piece (including packing)	1,083.84 g

Weight per piece (excluding packing)	898 g
Customs tariff number	85044095
Country of origin	CN

Technical data

Input data

AC operation

Supply system configuration	Star network (TN, TT, IT (PE))
Nominal input voltage range	220 V AC ... 240 V AC
Input voltage range	220 V AC ... 240 V AC -15 % ... +10 %
Switch-on voltage	typ. 70 V AC
Shut-down voltage	typ. 50 V AC
Electric strength, max.	≤ 300 V AC 15 s
Typical national grid voltage	230 V AC
Voltage type of supply voltage	AC
Inrush current integral (I^2t)	< 0.3 A^2s
Inrush current limitation	< 13.5 A (after 1 ms)
AC frequency range	50 Hz ... 60 Hz ±10 %
Mains buffering time	> 20 ms (190 V AC)
	> 20 ms (230 V AC)
Current consumption	1.3 A (230 V AC)
Nominal power consumption	285.7 VA
Protective circuit	Transient surge protection; Varistor
Power factor	> 0.9 (230 V AC)
Input fuse	3.15 A (internal (device protection))
Recommended breaker for input protection	4 A ... 16 A (Characteristic B, C, Z)
Discharge current to PE	< 3.5 mA
	< 1.7 mA (264 V AC, 60 Hz)

DC operation

Nominal input voltage range	220 V DC ... 400 V DC
Input voltage range	220 V DC ... 400 V DC -15 % ... +5 %
Derating	< 99 V DC (2 %/V)
Switch-on voltage	typ. 95 V DC
Shut-down voltage	typ. 50 V DC
Electric strength, max.	≤ 420 V DC
Voltage type of supply voltage	DC
Mains buffering time	> 20 ms (185 V DC)
	> 25 ms (400 V DC)
Current consumption	1.3 A (220 V DC)
	0.7 A (400 V DC)

Output data

Efficiency	typ. 92.5 % (230 V AC)
	typ. 94 % (400 V DC)
Output characteristic	U/I with dynamic load reserve

Nominal output voltage	48.5 V DC ±1 %
Nominal output current (I_N)	5 A
Dynamic Boost ($I_{Dyn.Boost}$)	7.5 A (5 s)
Derating	> 60 °C ... 70 °C (2.5 %/K)
Feedback voltage resistance	≤ 60 V DC
Protection against overvoltage at the output (OVP)	≤ 58 V DC
Control deviation	< 1.5 % (change in load, static 10 % ... 90 %)
	< 4 % (Dynamic load change 10 % ... 90 %, 10 Hz)
	< 0.1 % (change in input voltage ±10 %)
Residual ripple	< 20 mV_{PP} (with nominal values)
Short-circuit-proof	yes
No-load proof	yes
Output power	240 W
	360 W (5 s)
Peak switching voltages nominal load	< 15 mV_{PP}
Maximum no-load power dissipation	typ. 4 W (230 V AC)
	typ. 4 W (400 V DC)
Power loss nominal load max.	typ. 20 W (230 V AC)
	typ. 15 W (400 V DC)
Short-circuit current	< 7 A DC (permanent)
Rise time	20 ms (U_{OUT} (10 % ... 90 %))
Connection in parallel	yes, for redundancy and increased capacity
Fuse protection (secondary side)	electronic

Signal: DC OK

Continuous load current	100 mA

Signal relay 13/14

Default	closed
Digital	30 V AC 30 V DC 100 mA

Connection data

Input

Connection method	Push-in connection
Conductor cross-section, rigid min.	0.2 mm²
Conductor cross-section, rigid max.	4 mm²
Conductor cross-section flexible min.	0.2 mm²
Conductor cross-section flexible max.	2.5 mm²
Single conductor/flexible terminal point with ferrule with plastic sleeve, min.	0.25 mm²
Single conductor/flexible terminal point with ferrule with plastic sleeve, max.	1.5 mm²
Single conductor/flexible terminal point with ferrule without plastic sleeve, min.	0.25 mm²
Single conductor/flexible terminal point with ferrule without plastic sleeve, max.	2.5 mm²

Conductor cross-section AWG min.	24
Conductor cross-section AWG max.	12

Output

Connection method	Push-in connection
Conductor cross-section, rigid min.	0.2 mm²
Conductor cross-section, rigid max.	4 mm²
Conductor cross-section flexible min.	0.2 mm²
Conductor cross-section flexible max.	2.5 mm²
Single conductor/flexible terminal point with ferrule with plastic sleeve, min.	0.25 mm²
Single conductor/flexible terminal point with ferrule with plastic sleeve, max.	1.5 mm²
Single conductor/flexible terminal point with ferrule without plastic sleeve, min.	0.25 mm²
Single conductor/flexible terminal point with ferrule without plastic sleeve, max.	2.5 mm²
Conductor cross-section AWG min.	24
Conductor cross-section AWG max.	12

Signal

Connection method	Push-in connection
Conductor cross-section, rigid min.	0.2 mm²
Conductor cross-section, rigid max.	0.75 mm²
Conductor cross-section flexible min.	0.2 mm²
Conductor cross-section flexible max.	1.5 mm²
Single conductor/flexible terminal point with ferrule with plastic sleeve, min.	0.2 mm²
Single conductor/flexible terminal point with ferrule with plastic sleeve, max.	0.75 mm²
Single conductor/flexible terminal point with ferrule without plastic sleeve, min.	0.2 mm²
Single conductor/flexible terminal point with ferrule without plastic sleeve, max.	1 mm²
Conductor cross-section AWG min.	24
Conductor cross-section AWG max.	18

Signaling

Types of signaling	Floating signal contact

Signal output: LED status indicator

Signalization designation	DC OK
Status display	LED
Color	green
DC OK	U_{OUT} > 0.7 x U_N (U_N = 48 V DC)
13/14	U_{OUT} > 0.7 x U_N (U_N = 48 V DC)

Electrical properties

Number of phases	1
Insulation voltage input/output	5.1 kV DC (type test)
	3.1 kV DC (routine test)

Product properties

Product type	Power supply
Product family	TRIO POWER
MTBF (IEC 61709, SN 29500)	> 2220000 h (25 °C)
	> 1280000 h (40 °C)
	> 560000 h (60 °C)
	> 2220000 h (25 °C)
	> 1280000 h (40 °C)
	> 560000 h (60 °C)

Insulation characteristics

Protection class	I (in closed control cabinet)
Overvoltage category (EN 61010-1)	II (≤ 2000 m)
Degree of pollution	2

Dimensions

Width	42 mm
Height	130 mm
Depth	160 mm
Dimensional drawing	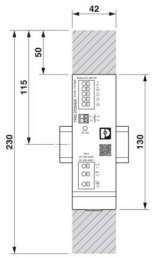
Width	42 mm
Height	130 mm
Depth	160 mm

Installation dimensions

Installation distance right/left	0 mm / 0 mm
Installation distance top/bottom	50 mm / 50 mm

Mounting

Mounting type	DIN rail mounting
Assembly note	alignable: horizontally 0 mm (≤ 40 °C) 10 mm (≤ 70 °C), vertically 50 mm
Mounting position	horizontal DIN rail NS 35, EN 60715
With protective coating	no

Material specifications

Flammability rating according to UL 94 (housing / terminal blocks)	V0
Housing material	Metal
Type of housing	Aluminum (AlMg3)
Hood version	Polycarbonate

Environmental and real-life conditions

Ambient conditions

Degree of protection	IP20
Ambient temperature (operation)	-25 °C ... 70 °C (>60°C derating: 1.6%/K)
Ambient temperature (storage/transport)	-40 °C ... 85 °C
Ambient temperature (start-up type tested)	-40 °C
Maximum altitude	≤ 2000 m
Climatic class	3K3 (EN 60721)
Max. permissible relative humidity (operation)	≤ 95 % (at 25 °C, non-condensing)
Shock	20 m/s² (2g), 11 ms, ± 100 Schocks (DIN EN 50125-3, DIN EN 60068-2-27)
Vibration (operation)	5 Hz ... 2 kHz, 2.3 m/s² (0.23g) (RMS) 5 h (DIN EN 50125-3, DIN EN 60068-2-64)

Standards and regulations

Rail applications	EN 50121-3-2
	EN 50121-4
	EN 50124-1
	EN 50125-3
	IEC 62236-3-2
	IEC 62236-4
	IEC 62236-5
Standard – Limitation of mains harmonic currents	EN 61000-3-2
Standard - Electrical safety	EN 61010-1
	VDE 0805 (SELV)
Standard – Safety extra-low voltage	IEC 61010-1 (SELV)
	IEC 61010-2-201 (PELV)
Standard - Safe isolation	IEC 61010-2-201
	IEC 61558-2-16
Standard - Safety of power supply units up to 1100 V (insulation distances)	DIN EN 61558-2-16

Approvals

UL approvals	UL 61010-1
	UL 61010-2-201

Conformity/Approvals

SIL in accordance with IEC 61508	0

EMC data

Electromagnetic compatibility	Conformance with EMC Directive 2014/30/EU
Low Voltage Directive	Conformance with Low Voltage Directive 2014/35/EC
Interference emission	Interference emission in accordance with EN 61000-6-3 (residential and commercial) and EN 61000-6-4 (industrial)
EMC requirements for noise immunity	EN 61000-6-1
	EN 61000-6-2

Conducted noise emission

Standards/regulations	EN 55016
	EN 61000-6-3 (Class B)

Noise emission

Standards/regulations	EN 55011 (EN 55022)

Noise emission

Standards/regulations	EN 55016
	EN 61000-6-3 (Class B)

Harmonic currents

Standards/regulations	EN 61000-3-2
Frequency range	Class A

Flicker

Standards/regulations	EN 61000-3-3
Frequency range	0 kHz ... 2 kHz

Electrostatic discharge

Standards/regulations	EN 61000-4-2

Electrostatic discharge

Contact discharge	6 kV (Test Level 4)
Discharge in air	8 kV (Test Level 4)
Comments	Criterion A

Electromagnetic HF field

Standards/regulations	EN 61000-4-3

Electromagnetic HF field

Frequency range	80 MHz ... 1 GHz
Test field strength	20 V/m (Test Level 3)
Frequency range	1 GHz ... 2 GHz
Test field strength	10 V/m (Test Level X)
Frequency range	2 GHz ... 2.7 GHz
Test field strength	10 V/m (Test Level 3)
Comments	Criterion A

Fast transients (burst)

Standards/regulations	EN 61000-4-4

Fast transients (burst)

Input	4 kV (Test Level 4 - asymmetrical)
Output	2 kV (Test Level 3 - asymmetrical)
Signal	2 kV (Test Level 4 - asymmetrical)
Comments	Criterion A

Surge voltage load (surge)

Standards/regulations	EN 61000-4-5

Surge voltage load (surge)

Input	2 kV (Test Level 4 - symmetrical)
	4 kV (Test Level 4 - asymmetrical)
Output	1 kV (Test Level 3 - symmetrical)
	2 kV (Test Level 3 - asymmetrical)
Signal	1 kV (Test Level 2 - asymmetrical)
Comments	Criterion A

Conducted interference

Standards/regulations	EN 61000-4-6

Conducted interference

Input/output/signal	asymmetrical
Frequency range	0.15 MHz ... 80 MHz
Comments	Criterion A
Voltage	10 V (Test Level 3)

Voltage dips

Standards/regulations	EN 61000-4-11
Voltage	230 V AC
Frequency	50 Hz
Voltage dip	70 %
Number of periods	25 periods
Additional text	Test Level 2
Comments	Criterion A
Voltage dip	40 %
Number of periods	10 periods
Additional text	Test Level 2
Comments	Criterion A
Voltage dip	0 %
Number of periods	1 period
Additional text	Test Level 2
Comments	Criterion A

Emitted interference

Standards/regulations	EN 61000-6-3

Radio interference voltage in acc. with EN 55011	EN 55011 (EN 55022) Class B, area of application: Industry and residential
Emitted radio interference in acc. with EN 55011	EN 55011 (EN 55022) Class B, area of application: Industry and residential

Criteria

Criterion A	Normal operating behavior within the specified limits.
Criterion B	Temporary impairment to operational behavior that is corrected by the device itself.
Criterion C	Temporary adverse effects on the operating behavior, which the device corrects automatically or which can be restored by actuating the operating elements.

Drawings

Dimensional drawing

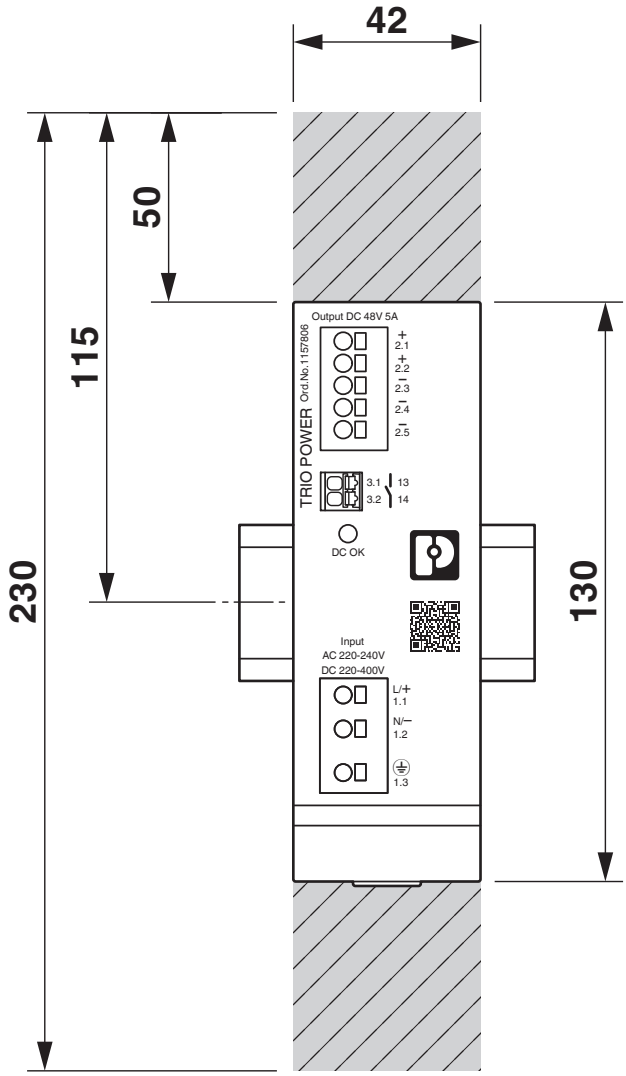

Device dimensions (dimensions in mm)

Dimensional drawing

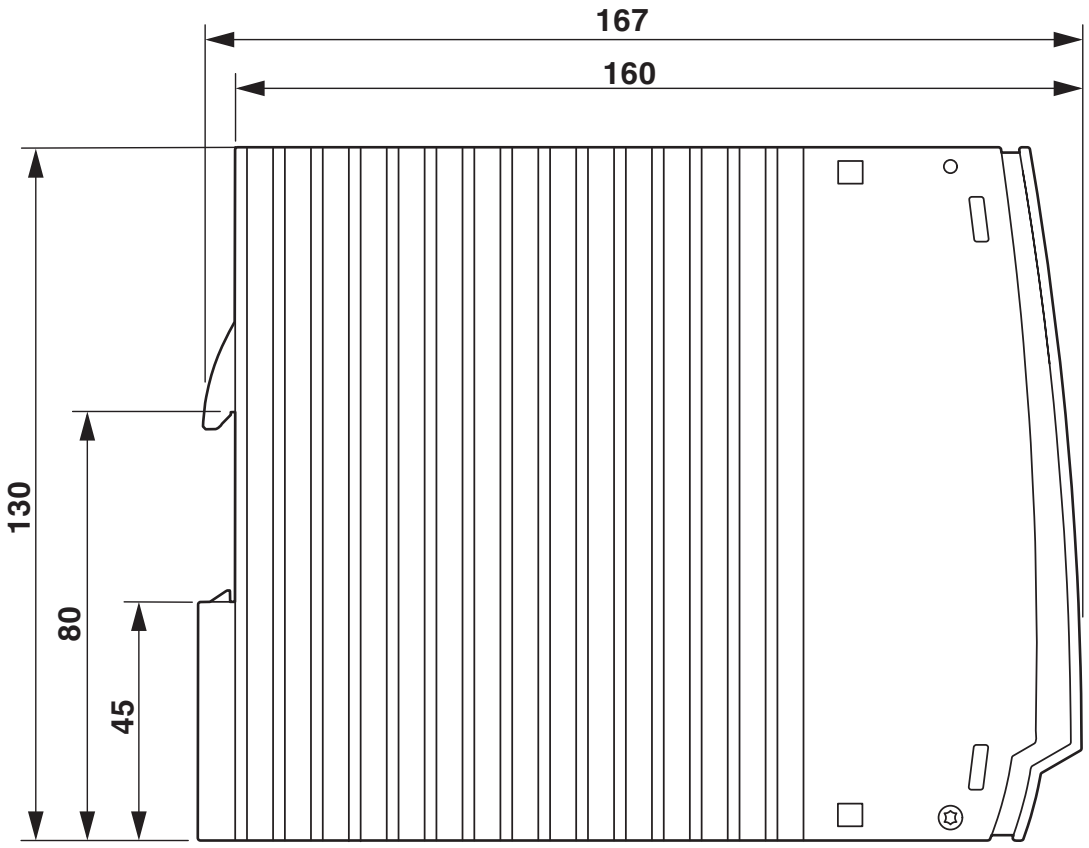

Device dimensions (dimensions in mm)

Schematic diagram

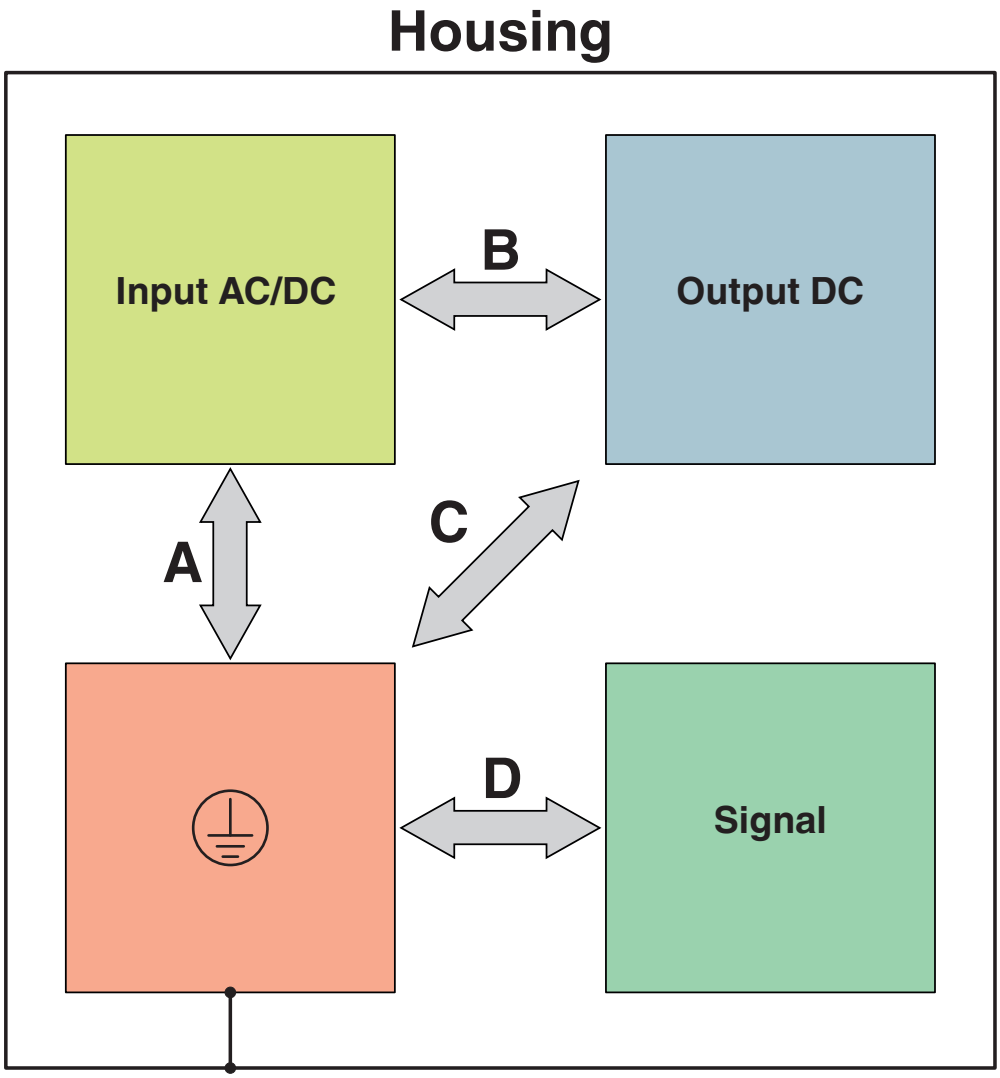

Test sections, insulation voltage

Block diagram

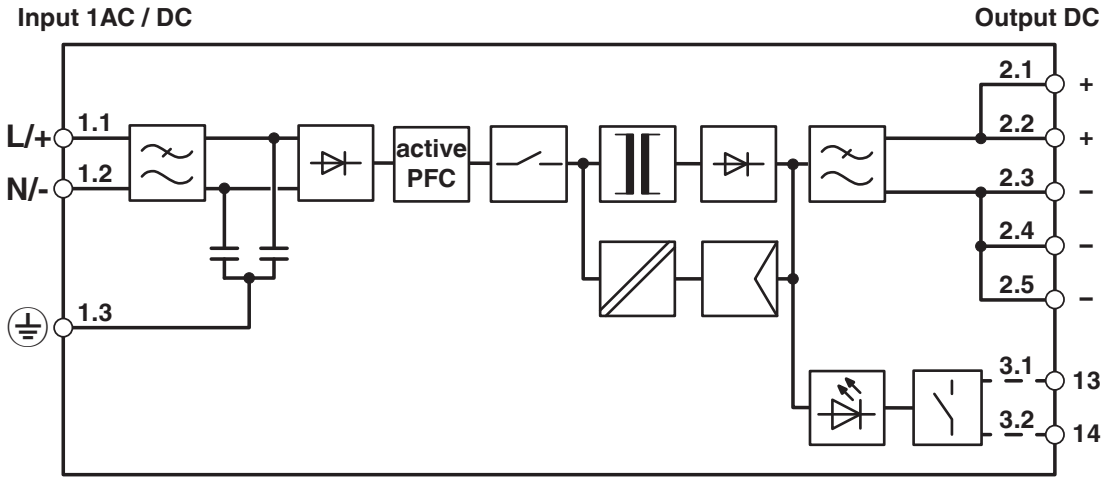

Block diagram

Approvals

To download certificates, visit the product detail page: https://www.phoenixcontact.com/gb/products/1157806

IECEE CB Scheme
Approval ID: SI-8695

cULus Listed
Approval ID: FILE E 123528

Classifications

ECLASS

ECLASS-13.0	27040701
ECLASS-15.0	27040701

ETIM

ETIM 10.0	EC002540

UNSPSC

UNSPSC 21.0	39121000

Environmental product compliance

EU RoHS

Fulfills EU RoHS substance requirements	Yes
Exemption	7(a), 7(c)-I

China RoHS

Environment friendly use period (EFUP)	EFUP-25
	An article-related China RoHS declaration table can be found in the download area for the respective article under "Manufacturer declaration". For all articles with EFUP-E, no China RoHS declaration table issued and required.

EU REACH SVHC

REACH candidate substance (CAS No.)	Diboron trioxide(CAS: 1303-86-2)
	Lead monoxide (lead oxide)(CAS: 1317-36-8)
	Lead(CAS: 7439-92-1)
	6,6'-di-tert-butyl-2,2'-methylenedi-p-cresol(CAS: 119-47-1)
SCIP	20b4e807-89ca-4c6d-a64d-94254a69237e

EF3.1 Climate Change

CO2e kg	33.87 kg CO2e

Phoenix Contact 2026 © - all rights reserved
https://www.phoenixcontact.com

PHOENIX CONTACT Ltd
Halesfield 13, Telford
Shropshire, TF7 4PG
01952 681700
info@phoenixcontact.co.uk