PLC-RSC-230UC/ 1AU/SEN/SO46 - Relay module

1125984

https://www.phoenixcontact.com/gb/products/1125984

Please be informed that the data shown in this PDF document is generated from our online catalog. Please find the complete data in the user documentation. Our general terms of use for downloads are valid.



PLC-INTERFACE for protection against interference currents/voltages on the control side. Consisting of PLC-BSC-230UC/ 1/SEN/SO46 basic terminal block with screw connection and plug-in miniature relay with multi-layer gold contact, 1 N/O contact, 230 V AC input voltage

Commercial data

Item number	1125984
Packing unit	10 pc
Minimum order quantity	10 pc
Sales key	DK622M
Product key	DK622M
GTIN	4063151052980
Weight per piece (including packing)	36.48 g
Weight per piece (excluding packing)	30.04 g
Customs tariff number	85364900
Country of origin	DE

Technical data

Notes

Notes on operation	The PLC-ATP divider plate must be installed for voltages greater than 250 V (L1, L2, L3) between identical terminal blocks on adjacent modules.
Notes on operation	The PLC-ATP divider plate should be installed for safe isolation between adjacent modules
Assembly note	The PLC-ATP divider plate is required at the start and end of every PLC terminal strip.
Notes on operation	The system installer must ensure the touch protection of the product (at voltages > 25 V AC/60 V DC). The product is a built-in device without protection against direct contact.
Notes on operation	If the specified maximum values for multi-layer contact relays are exceeded, the gold plating is destroyed. The maximum values of the power contact relay are then valid. This can result in a shorter service life than with a pure power contact.

Product properties

Product type	Relay Module
Product family	PLC-INTERFACE
Application	Input function
Operating mode	100% operating factor
Mechanical service life	2x 10^7 cycles

Insulation characteristics: Air clearances and creepage distances

Insulation	Safe isolation, reinforced insulation
Overvoltage category	III
Pollution degree	3

Data management status

Date of last data management	01.04.2026

Electrical properties

Maximum power dissipation for nominal condition	2.3 W
Test voltage (Winding/contact)	4 kV_{rms} (50 Hz, 1 min., winding/contact)

Air clearances and creepage distances

Rated insulation voltage	250 V AC
Rated surge voltage	6 kV

Input data

Coil side

Nominal input voltage U_N	230 V AC
	220 V DC
Input voltage range	179.4 V AC ... 264.5 V AC (20 °C)
	171.6 V DC ... 253 V DC (20 °C)

Nominal voltage (plugged-in electromechanical relay)	60 V DC
Mains frequency	50/60 Hz
Drive and function	monostable
Drive (polarity)	polarized
Typical input current at U_N	8.8 mA (50 Hz)
	10 mA (60 Hz)
Typical response time	7 ms
Typical release time	20 ms
Typical release voltage	80 V AC
Protective circuit	Bridge rectifier
	RC element
Status display	LED (yellow)

Output data

Switching

Contact switching type	1 N/O contact
Type of switch contact	Single contact
Contact material	AgSnO, hard gold-plated
Maximum switching voltage	30 V AC
	36 V DC
Minimum switching voltage	100 mV (at 10 mA)
Limiting continuous current	50 mA
Maximum inrush current	50 mA
Min. switching current	1 mA (24 V)
Short-circuit current	200 A (conditional short-circuit current)
Interrupting rating (ohmic load) max.	1.2 W (24 V DC)
Switching power min.	0.12 W
Output fuse	4 A gL/gG NEOZED

Connection data

Connection method	Screw connection
Stripping length	8 mm
Screw thread	M3
Conductor cross-section rigid	0.14 mm² ... 2.5 mm²
Conductor cross-section flexible	0.14 mm² ... 2.5 mm²
	0.2 mm² ... 2.5 mm² (Single ferrule)
	2x 0.5 mm² ... 1.5 mm² (TWIN ferrule)
Conductor cross-section AWG	26 ... 14
Tightening torque	0.45 Nm ... 0.55 Nm (Usually these terminal blocks must be supported during conductor connection (held by one hand, supported on the housing))

Dimensions

Item dimensions

Width	6.2 mm
Height	80 mm
Depth	94 mm

Material specifications

Color	gray (RAL 7042)

Environmental and real-life conditions

Ambient conditions

Degree of protection (Relay base)	IP20 (Relay base)
Degree of protection (Relay)	RT III (Relay)
Degree of protection (Installation location)	≥ IP54 (Installation location)
Ambient temperature (operation)	-40 °C ... 55 °C
Ambient temperature (storage/transport)	-40 °C ... 85 °C
Altitude	≤ 2000 m

Approvals

CE

Certificate	CE-compliant

UKCA

Certificate	UKCA-compliant

Shipbuilding approval

Certificate	TAE0000196

Corrosive gas test

Identification	ISA-S71.04. G3 Harsh Group
	EN 60068-2-60

Shipbuilding data

Temperature	D
Humidity	A
Vibration	B/C
EMC	B
Enclosure	Required protection according to the Rules shall be provided upon installation on board

EMC data

Electromagnetic compatibility	Conformance with EMC directive
Low Voltage Directive	Conformance with Low Voltage Directive

Standards and regulations

Air clearances and creepage distances

Standards/regulations	EN 61810

	IEC 60947-5-1

Mounting

Mounting type	DIN rail mounting
Assembly note	in rows with zero spacing
Mounting position	any

Drawings

Application drawing

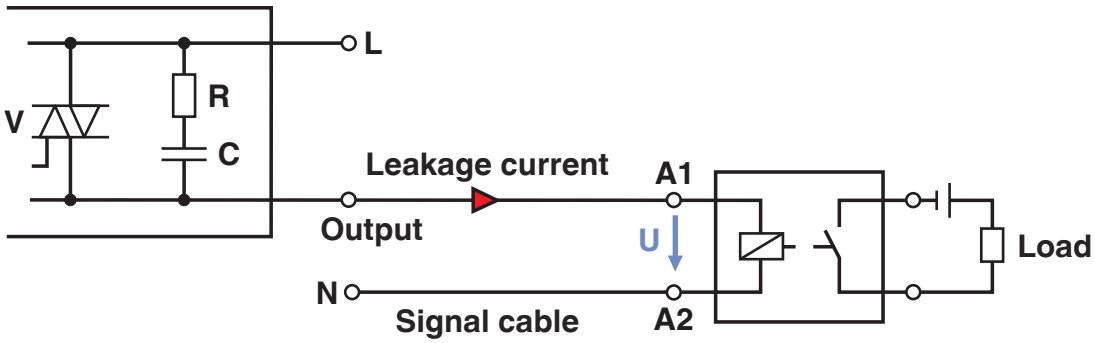

Occurrence of interference signals
Scenario 1: controller - AC output card

Application drawing

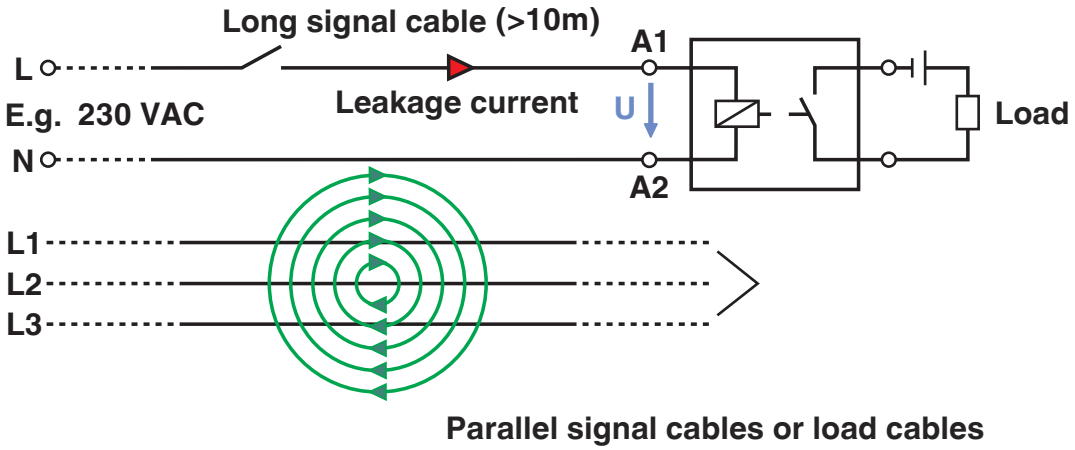

Occurrence of interference signals
Scenario 2: long signal cables

Diagram

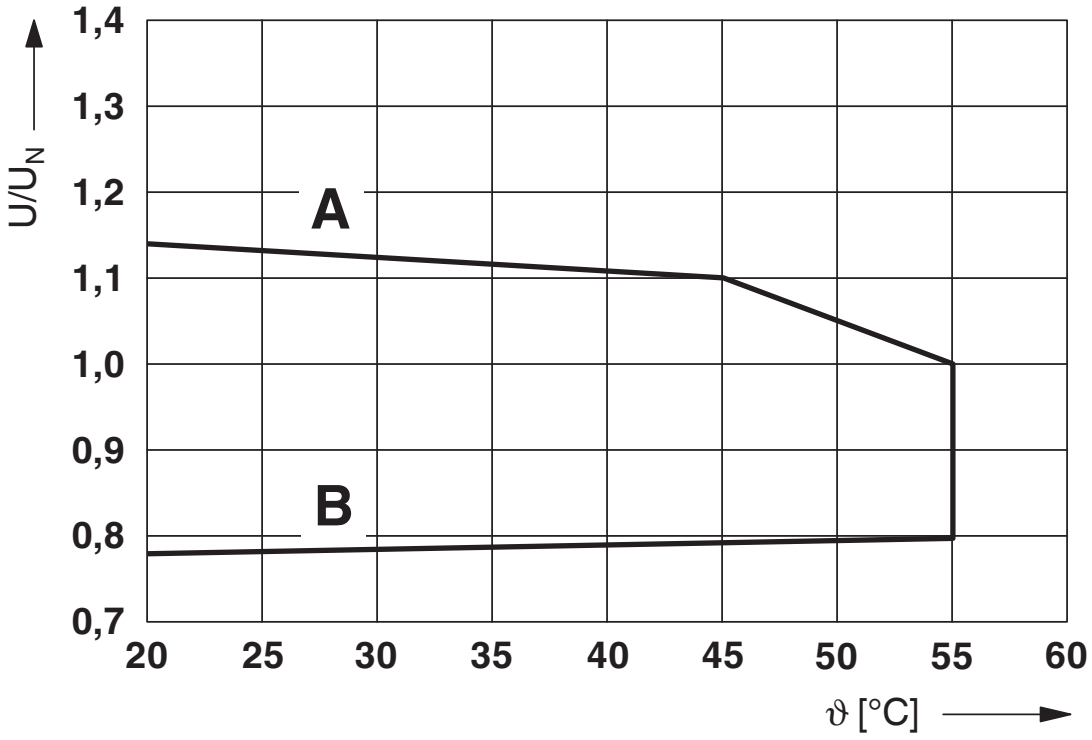

Curve A

Maximum permissible continuous voltage U_{max} with limiting continuous current on the contact side (see relevant technical data)

Curve B

Minimum permissible operate voltage U_{op} after pre-excitation (see relevant technical data)

Diagram

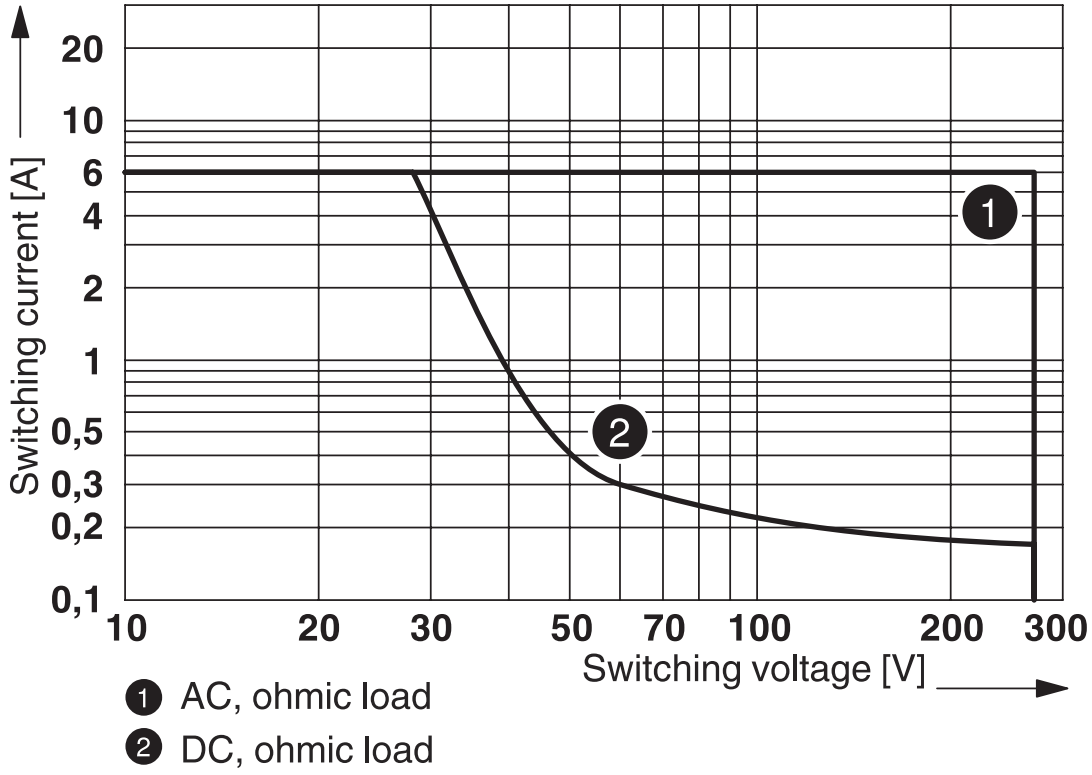

Interrupting rating

Diagram

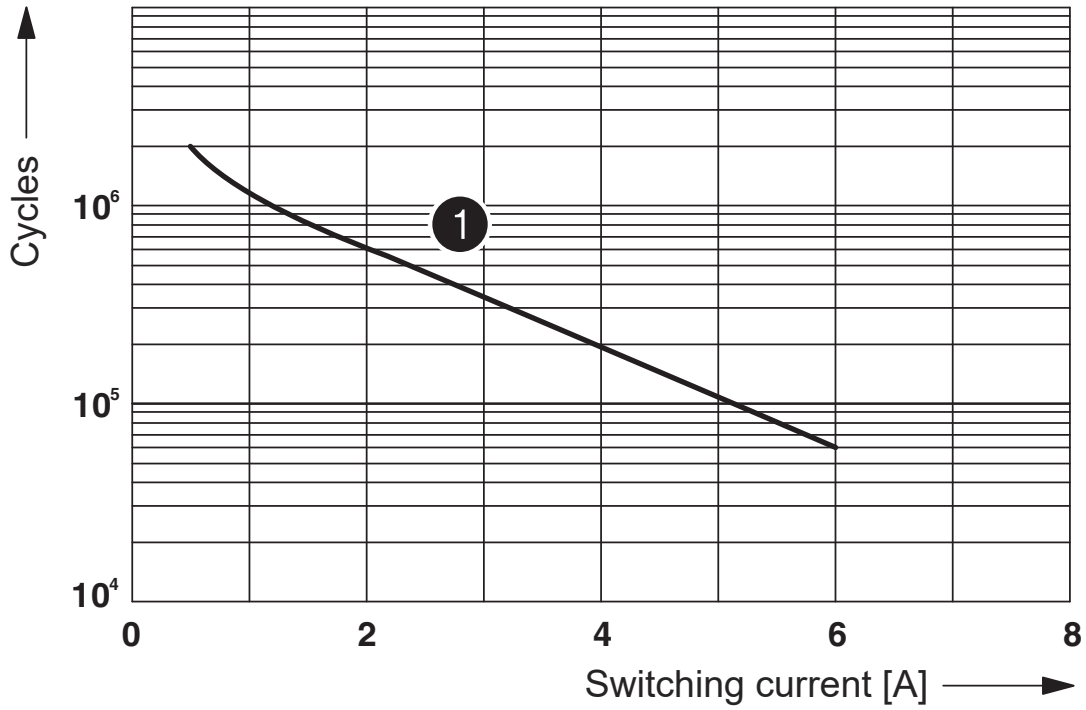

1 250 V AC, ohmic load

Electrical service life

Diagram

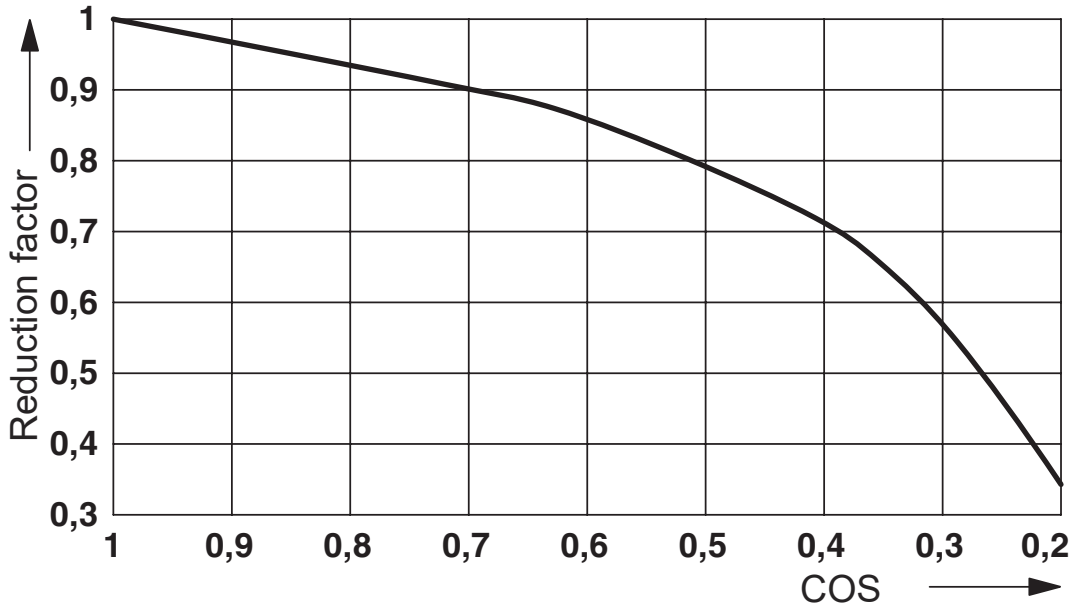

Service life reduction factor

Diagram

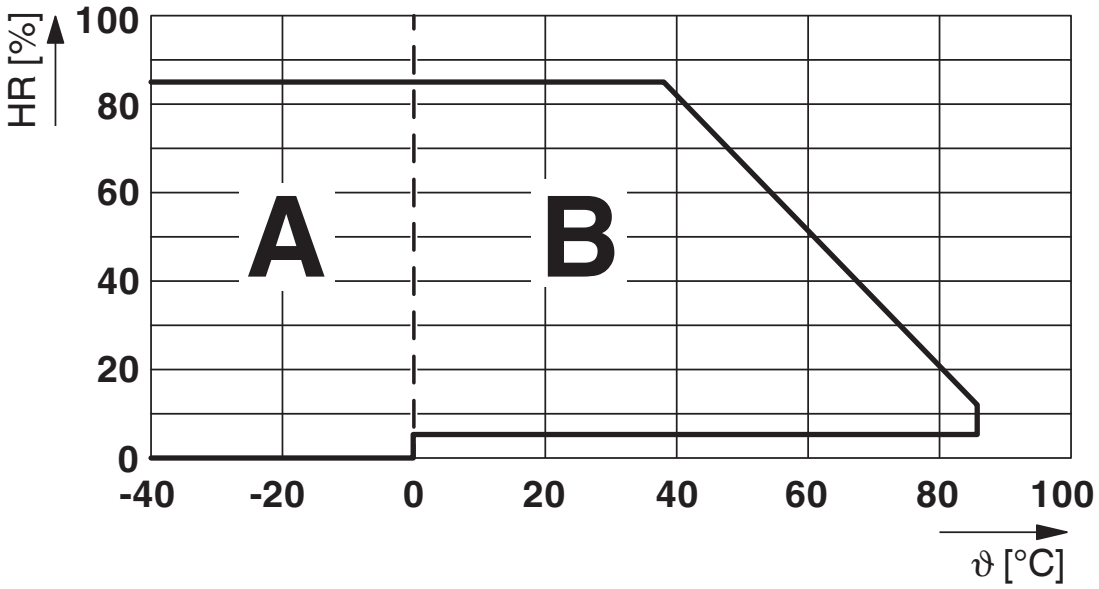

Permissible humidity for operation and storage.
The maximum permissible ambient temperature as specified in the data sheet must be observed.

Area A: Ice buildup at ambient temperatures ≤ 0°C must be prevented
Area B: Condensation at ambient temperatures > 0°C must be prevented

On 30 full days that are naturally distributed across an entire year, a humidity level of 95% is permissible at an ambient temperature ≤ 25°C.

Approvals

To download certificates, visit the product detail page: https://www.phoenixcontact.com/gb/products/1125984

EAC
Approval ID: RU D-DE.B*00573/18

cULus Listed
Approval ID: E140324

cULus Listed
Approval ID: E140324

cULus Listed
Approval ID: E140324

DNV
Approval ID: TAE0000196

Classifications

ECLASS

ECLASS-13.0	27371601
ECLASS-15.0	27371601

ETIM

ETIM 10.0	EC001437

UNSPSC

UNSPSC 21.0	39122300

Environmental product compliance

EU RoHS

Fulfills EU RoHS substance requirements	Yes
Exemption	7(a), 7(c)-I

China RoHS

Environment friendly use period (EFUP)	EFUP-50
	An article-related China RoHS declaration table can be found in the download area for the respective article under "Manufacturer declaration". For all articles with EFUP-E, no China RoHS declaration table issued and required.

EU REACH SVHC

REACH candidate substance (CAS No.)	Lead(CAS: 7439-92-1)
SCIP	c9206f5e-adf0-4f95-a2c3-da794e713b8a

EF3.1 Climate Change

CO2e kg	0.926 kg CO2e

Phoenix Contact 2026 © - all rights reserved
https://www.phoenixcontact.com

PHOENIX CONTACT Ltd
Halesfield 13, Telford
Shropshire, TF7 4PG
01952 681700
info@phoenixcontact.co.uk