CAPAROC PM IOL - Feed-in module

1115670

https://www.phoenixcontact.com/gb/products/1115670

Please be informed that the data shown in this PDF document is generated from our online catalog. Please find the complete data in the user documentation. Our general terms of use for downloads are valid.

CRA-READY



Power module with IO-Link interface for supplying the CAPAROC circuit breaker system with 12 or 24 V DC for up to 20 channels. For DIN rail installation via the CAPAROC current rails.

Your advantages

- The benchmark that you can customize by selecting single signals and resets all the way to IO-Link and PROFINET communication
- Particularly easy operation for everyone with tool-free assembly, direct feed-in to the busbar, and clear operating states
- Exceptionally easy design-in with the comprehensive digital data packet

ELEKTROGERÄTE RÜCKNAHME

Commercial data

Item number	1115670
Packing unit	1 pc
Minimum order quantity	1 pc
Sales key	CLA231
Product key	CLA231
GTIN	4063151040901
Weight per piece (including packing)	130 g
Weight per piece (excluding packing)	92 g

Customs tariff number	85363030
Country of origin	DE

Technical data

Notes

Note on application	As things stand now, we are preparing the product so that, as of December 11, 2027, it will comply with the requirements of the EU Cyber Resilience Act (CRA) based on the information currently available regarding the CRA.

Product properties

Product type	Device circuit breakers
Product family	CAPAROC
Type	Plug-in module
Number of slots	2

Insulation characteristics

Protection class	III
Pollution degree	2

Electrical properties

General

Operating voltage	10 V DC ... 30 V DC
Rated voltage	12 V DC
	24 V DC
Rated current I_N	45 A (Total current input)
Tripping method	E (electronic)
Feedback resistance	max. 35 V DC
Dielectric strength	35 V DC (Load circuit)
Efficiency	> 99 %
Closed circuit current I_0	typ. 12 mA (no load at 24 V)
Power dissipation	typ. 0.27 W (no load at 24 V)
	< 1.5 W (in nominal operation at 24 V and 45 A)
Temperature derating	45 A (Total current at 40°C)
	30 A (Total current at 65 °C)
MTBF (IEC 61709, SN 29500)	13826266.85 h (at 25 °C with 21 % load)
	5534344.72 h (at 40°C with 34.25% load)
	687502.35 h (at 65°C with 100% load)
Voltage drop	5 mV (at 10 A)

Load circuit

Undervoltage switch-off	≤ 9.2 V DC (active)
	≥ 10.2 V DC (inactive)
Overvoltage switch-off	≥ 30.5 V DC (active)
	≤ 29.5 V DC (inactive)

Reset

Current consumption	typ. 0.5 mA (at 24 V DC)
Pulse length	≥ 50 ms

Connection data

Main circuit IN+

Connection method	Push-in connection
Stripping length	18 mm
Conductor cross-section rigid	0.5 mm² ... 16 mm²
Conductor cross-section AWG	20 ... 8
Conductor cross-section, flexible, with ferrule, with plastic sleeve	0.5 mm² ... 16 mm²
Conductor cross-section, flexible, with ferrule, without plastic sleeve	0.5 mm² ... 16 mm²

Main circuit IN-

Connection method	Push-in connection
Stripping length	18 mm
Conductor cross-section rigid	0.5 mm² ... 16 mm²
Conductor cross-section AWG	20 ... 8
Conductor cross-section, flexible, with ferrule, with plastic sleeve	0.5 mm² ... 16 mm²
Conductor cross-section, flexible, with ferrule, without plastic sleeve	0.5 mm² ... 16 mm²

IO-Link

Connection method	Push-in connection
Stripping length	8 mm
Conductor cross-section rigid	0.2 mm² ... 1.5 mm²
Conductor cross-section AWG	24 ... 16
Conductor cross-section, flexible, with ferrule, with plastic sleeve	0.2 mm² ... 0.75 mm²
Conductor cross-section, flexible, with ferrule, without plastic sleeve	0.2 mm² ... 1.5 mm²

Interfaces

IO-Link

Interface type	IO-Link
Specification	V1.1
Reverse polarity protection	yes
Transmission speed	230.4 kbps (COM3)
Cycle Time	min. 20 ms
Amount of process data	8 Byte (Input data)
	3 Byte (Output data)
Nominal voltage for I/O supply	24 V DC
Current consumption	typ. 30 mA (IO-Link L+)
IO-Link Vendor ID	176_{dec}, 00 $B0_{hex}$
IO-Link Device ID	393760_{dec}, 06 02 20_{hex}
Maximum system extension	≤ 20 (Channels)

Signaling

IO-Link LED off	off (No communication)
IO-Link LED green	flashing (IO-Link connection exists)
Power (PWR) LED green	lit (Supply voltage OK)
Power (PWR) LED red	lit (Supply voltage outside the nominal range)
	flashing (System topology changed)

Dimensions

Dimensional drawing	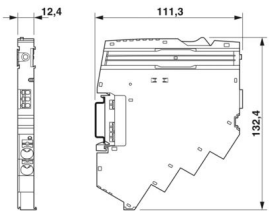
Width	12.4 mm
Height	132.4 mm
Depth	111.3 mm (incl. DIN rail 7.5 mm)

Material specifications

Color	light gray (RAL 7035)
Material	PA 6
	PA 6
	PA 6
	PC
Flammability rating according to UL 94	V-0

Environmental and real-life conditions

Ambient conditions

Degree of protection	IP20
Ambient temperature (operation)	-30 °C ... 65 °C
Ambient temperature (storage/transport)	-40 °C ... 70 °C
Altitude	≤ 4000 m (amsl)
Humidity test	96 h, 95 % RH, 40 °C
Shock (operation)	30g (11 ms period, half-sine shock pulse, according to IEC 60068-2-27)
	25g (6 ms duration, half-sine shock pulse in accordance with IEC 60068-2-27, continuous shock)
Vibration (operation)	5g (10 Hz ... 150 Hz / 10 cycles / axis / X, Y, Z)

Approvals

UL approval

Identification	UL/C-UL Listed UL 508

Corrosive gas test

Identification	ISA S71.04.2013 G3 Harsh Group A

Standards and regulations

Standards/specifications	EN 61000-6-2
Note	EMC – Immunity for industrial areas
Standards/specifications	EN 61000-6-3
Note	EMC – Emission for residential, business and commercial properties and small operations
Standards/specifications	EN 60068-2-78
Note	Environmental influences – Moisture and heat, constant
Standards/specifications	EN 50178
Note	Equipping power installations with electronic equipment

Mounting

Mounting type	pluggable onto CAPAROC CR… current rail

Drawings

Dimensional drawing

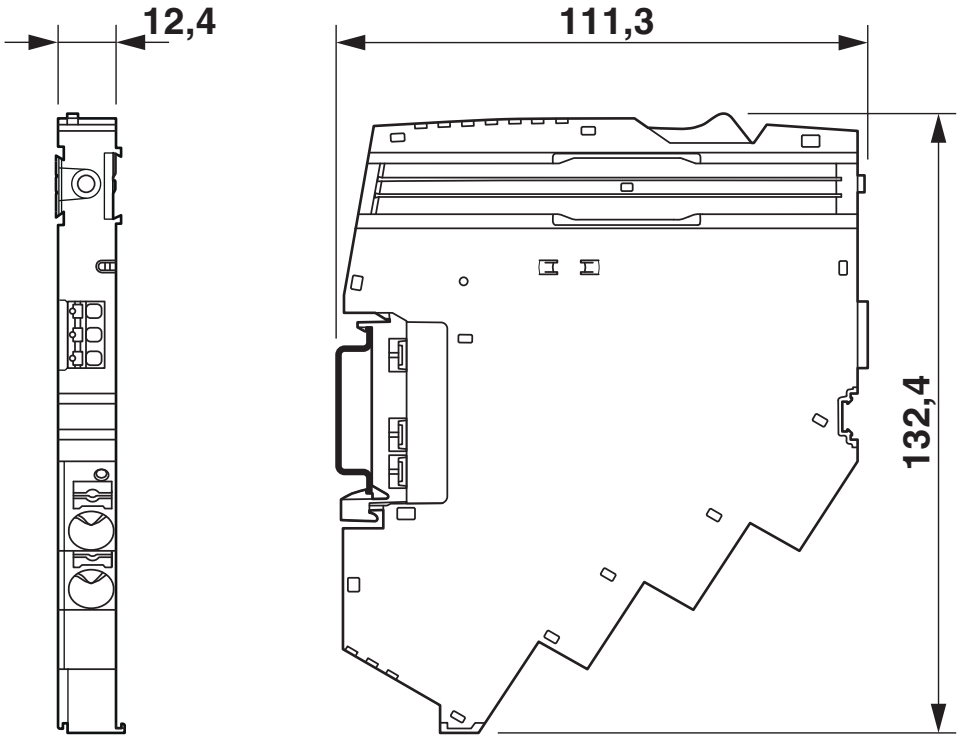

Product drawing



Diagram

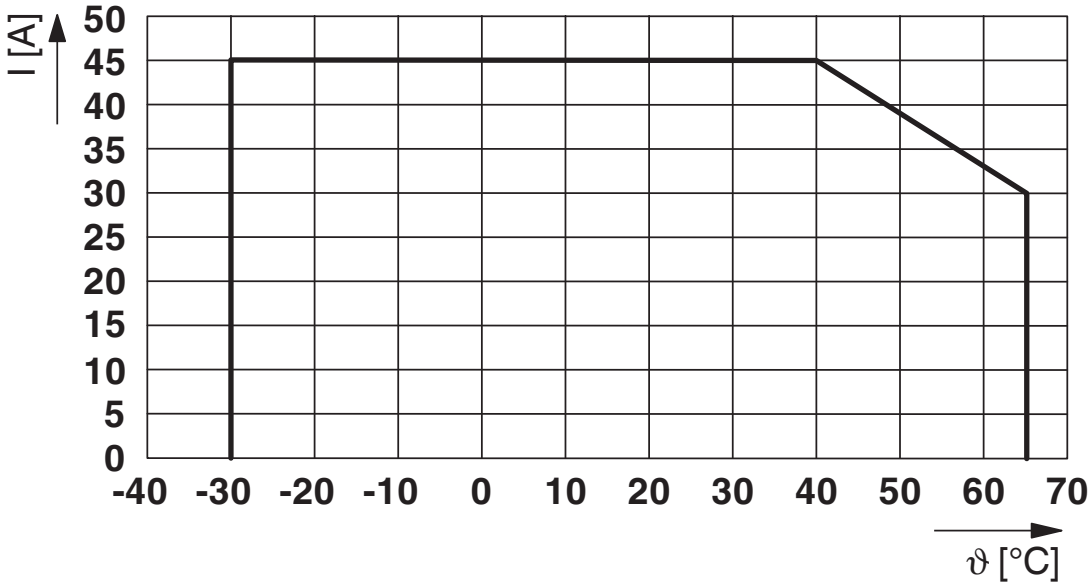

Max. permissible current in relation to the ambient temperature

Block diagram

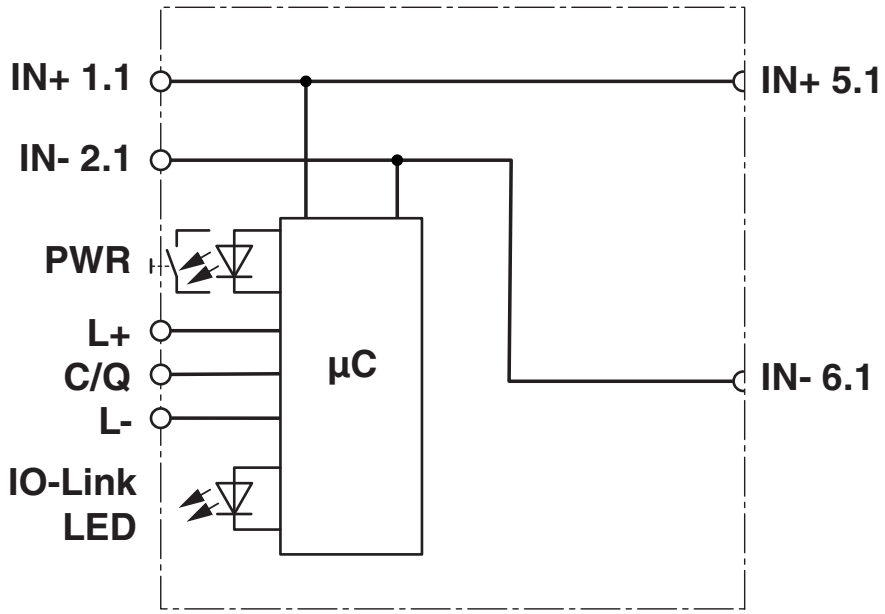

Approvals

To download certificates, visit the product detail page: https://www.phoenixcontact.com/gb/products/1115670

UL Listed
Approval ID: E123528

cUL Listed
Approval ID: E123528

Classifications

ECLASS

ECLASS-13.0	27140401
ECLASS-15.0	27140401

ETIM

ETIM 10.0	EC003538

UNSPSC

UNSPSC 21.0	39121400

Environmental product compliance

EU RoHS

Fulfills EU RoHS substance requirements	Yes
Exemption	7(a), 7(c)-I

China RoHS

Environment friendly use period (EFUP)	EFUP-50
	An article-related China RoHS declaration table can be found in the download area for the respective article under "Manufacturer declaration". For all articles with EFUP-E, no China RoHS declaration table issued and required.

EU REACH SVHC

REACH candidate substance (CAS No.)	Lead(CAS: 7439-92-1)
SCIP	5447ed30-a625-4150-837d-b57361cfdd27

EF3.1 Climate Change

CO2e kg	4.194 kg CO2e

Phoenix Contact 2026 © - all rights reserved
https://www.phoenixcontact.com

PHOENIX CONTACT Ltd
Halesfield 13, Telford
Shropshire, TF7 4PG
01952 681700
info@phoenixcontact.co.uk