# CAPAROC E1 12-24DC/12-20A - Electronic circuit breaker

1115663

https://www.phoenixcontact.com/gb/products/1115663

Please be informed that the data shown in this PDF document is generated from our online catalog. Please find the complete data in the user documentation. Our general terms of use for downloads are valid.

CRA-READY



1-channel electronic circuit breaker module for protecting loads at 12 and 24 V DC against overload and short circuit with current limit. Nominal current adjustable from 12 A to 20 A using step switch. For DIN rail installation via the CAPAROC current rails.

## Your advantages

- The customizable standard, thanks to individual combinations of the future-proof modular system
- Easy operation for everyone through tool-free assembly, uninterrupted installation, and transparent operating state
- Protection and supply of particularly large loads, thanks to the extended nominal current range up to 20 A

ELEKTROGERÄTE RÜCKNAHME

## Commercial data

| | |
|---|---|
| Item number | 1115663 |
| Packing unit | 1 pc |
| Minimum order quantity | 1 pc |
| Sales key | CLA232 |
| Product key | CLA232 |
| GTIN | 4063151040574 |
| Weight per piece (including packing) | 96 g |
| Weight per piece (excluding packing) | 89.1 g |

| | |
|---|---|
| Country of origin | DE |

## Technical data

### Notes

| | |
|---|---|
| Note on application | As things stand now, we are preparing the product so that, as of December 11, 2027, it will comply with the requirements of the EU Cyber Resilience Act (CRA) based on the information currently available regarding the CRA. |

General

| | |
|---|---|
| Note | LABS release – in accordance with test specification VW PV 3. 10.7:2005-0 |
| | When connecting the conductor, make sure that the CAPAROC modules are not pulled apart due to tensile force. Gaps must not be created between the modules. |

### Product properties

| | |
|---|---|
| Product type | Device circuit breakers |
| Product family | CAPAROC |
| Type | Plug-in module |
| Number of positions | 1 |
| No. of channels | 1 |
| Number of slots | 2 |

Insulation characteristics

| | |
|---|---|
| Protection class | III |
| Pollution degree | 2 |

### Electrical properties

General

| | |
|---|---|
| Operating voltage | 10 V DC ... 30 V DC |
| Rated voltage | 12 V DC |
| | 24 V DC |
| Rated current $I_N$ | 20 A (per channel) |
| | adjustable from 2 A to 20 A in 1 A increments, in RC mode via power module with communication interface |
| Rated current $I_N$ | 12 / 14 / 16 / 18 / 20 A DC (Adjustable via rotary coding switches) |
| Rated current (pre-adjusted) | 12 A |
| Rated surge voltage | 0.5 kV |
| Tripping method | E (electronic) |
| Feedback resistance | max. 35 V DC |
| Switch-on delay | 50 ms (each channel preset by default) |
| | can be adapted with CAPAROC PM IOL and CAPAROC PM PN power modules |
| Required backup fuse | Only required if $I_{max}$ of the power supply > the short-circuit switching capacity. Integrated failsafe element. |
| Short-circuit switching capacity | 300 A |

| | |
|---|---|
| Dielectric strength | 35 V DC (Load circuit) |
| Active current limitation | typ. 1.7 x $I_N$ |
| | Dynamic range of 1.4 ... 1.7 x $I_N$ in case of a weak power supply unit |
| Fuse | electronic |
| Efficiency | > 99 % |
| Closed circuit current $I_0$ | typ. 11 mA (no load at 24 V) |
| Power dissipation | typ. 280 mW (no load at 24 V) |
| | < 2.8 W (In nominal operation at 24 V and 20 A) |
| Measuring tolerance I | ± 10 % (typ.) |
| Temperature derating | 20 A (Total current at 40°C) |
| | 12 A (Total current at 65 °C) |
| MTBF (IEC 61709, SN 29500) | 9874919 h (at 25 °C with 21 % load) |
| | 4130456 h (at 40°C with 34.25% load) |
| | 476899 h (at 40°C with 100% load) |
| Voltage drop | < 0.16 V (at 20 A) |
| Fail-safe element | 30 A DC (2 x 15 A parallel per output channel) |
| Contact switching type | without electrical isolation |

Load circuit

| | |
|---|---|
| Shutdown time | 5 s (with overload 1.1…1.5 x $I_N$) |
| | typ. 100 ms |
| | typ. 7 ms (for short circuit > 1,5 x $I_N$) |
| Undervoltage switch-off | ≤ 8.5 V DC (active) |
| | ≥ 9.2 V DC (inactive) |
| Overvoltage switch-off | ≥ 31.5 V DC (active) |
| | ≤ 30.5 V DC (inactive) |
| Max. capacitive load | 75000 µF (Depending on the current setting, the system voltage, and the available short-circuit current) |

## Connection data

Fuse-protected output

| | |
|---|---|
| Connection method | Push-in connection |
| Stripping length | 10 mm |
| Conductor cross-section flexible | 0.2 mm² ... 4 mm² |
| Conductor cross-section rigid | 0.2 mm² ... 4 mm² |
| Conductor cross-section AWG | 24 ... 12 |
| Conductor cross-section, flexible, with ferrule, with plastic sleeve | 0.25 mm² ... 4 mm² |
| Conductor cross-section, flexible, with ferrule, without plastic sleeve | 0.25 mm² ... 4 mm² |

## Signaling

| | |
|---|---|
| Channel LED off | off (Channel switched off) |
| Channel LED yellow | lit (Channel switched on, channel load > 80% ) |
| | two flashes (Check the installation, no communication to power |

| | |
|---|---|
| | module) |
| Channel LED yellow-green | flashing (Nominal current assistant) |
| Channel LED green | lit (Channel switched on) |
| | flashing (Channel switched on, rotary switch position does not correspond to the set value) |
| Channel LED red | lit (Channel switched off, over- or undervoltage active) |
| | ON temporarily (Channel switched off, 5 s cool-down phase, overload or short-circuit release) |
| | flashing (Channel switched off, ready to be switched back on, overload or short-circuit release) |
| | two flashes (Channel switched off, system total current limit exceeded, weak power supply unit detected) |
| Channel LED red-yellow | flashing (Channel is overloaded and is switched off) |
| Channel LED red-green | flashing (Channel switched off, rotary switch position does not correspond to the set value after overload or short-circuit tripping) |

## Dimensions

| | |
|---|---|
| Dimensional drawing | 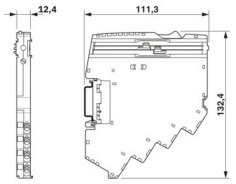  |
| Width | 12.4 mm |
| Height | 132.4 mm |
| Depth | 111.3 mm (incl. DIN rail 7.5 mm) |

## Material specifications

| | |
|---|---|
| Color | light gray (RAL 7035) |
| Material | PA 6 |
| | PA 6 |
| | PA 6 |
| | PC |
| Flammability rating according to UL 94 | V-0 |

## Environmental and real-life conditions

Ambient conditions

| | |
|---|---|
| Degree of protection | IP20 |
| Ambient temperature (operation) | -30 °C ... 65 °C (the temperature range of the power module and the maximum current depending on the ambient temperature must be taken into consideration) |
| Ambient temperature (storage/transport) | -40 °C ... 70 °C |
| Altitude | ≤ 4000 m (amsl) |
| Humidity test | 96 h, 95 % RH, 40 °C |
| Shock (operation) | 30g (11 ms period, half-sine shock pulse, according to IEC |

| | |
|---|---|
| | 60068-2-27) |
| | 25g (6 ms duration, half-sine shock pulse in accordance with IEC 60068-2-27, continuous shock) |
| Vibration (operation) | 5g (10 Hz ... 150 Hz / 10 cycles / axis / X, Y, Z) |

## Standards and regulations

| | |
|---|---|
| Standards/specifications | EN 61000-6-2 |
| Note | EMC – Immunity for industrial areas |
| Standards/specifications | EN 61000-6-3 |
| Note | EMC – Emission for residential, business and commercial properties and small operations |
| Standards/specifications | EN 60068-2-78 |
| Note | Environmental influences – Moisture and heat, constant |
| Standards/specifications | EN 50178 |
| Note | Equipping power installations with electronic equipment |
| Standards/specifications | EN 60068-2-6 |
| Note | Environmental influences – Vibrations (sinusoidal) |
| Standards/specifications | EN 60068-2-27 |
| Note | Environmental influences – Shocks |

## Mounting

| | |
|---|---|
| Mounting type | pluggable onto CAPAROC CR… current rail |

## Drawings

Dimensional drawing

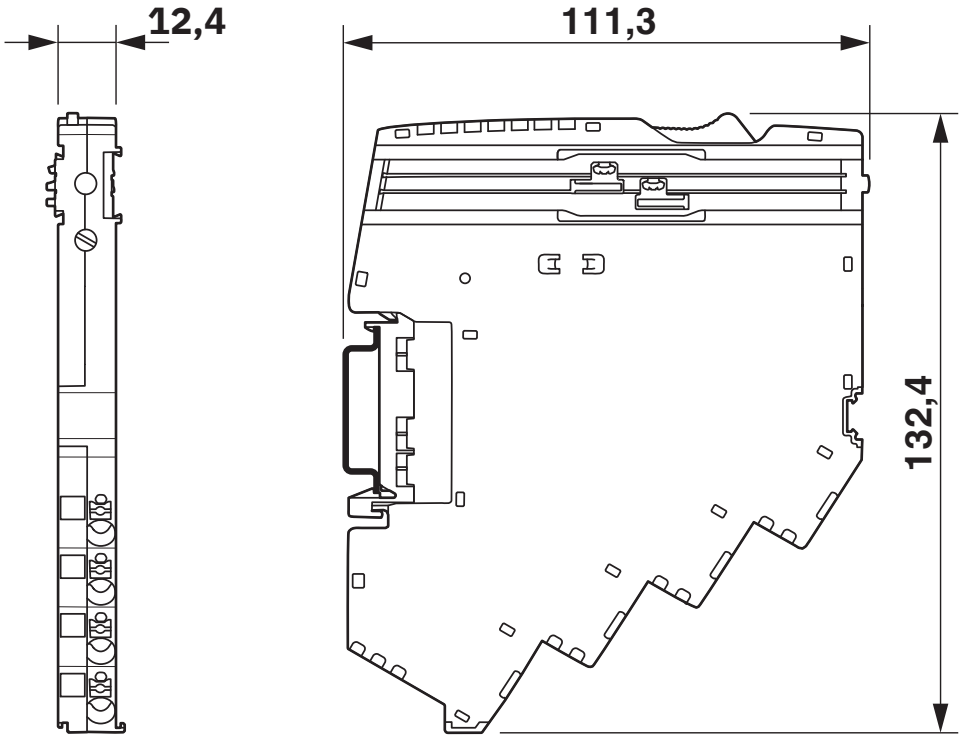

# CAPAROC E1 12-24DC/12-20A - Electronic circuit breaker

1115663

https://www.phoenixcontact.com/gb/products/1115663

Product drawing

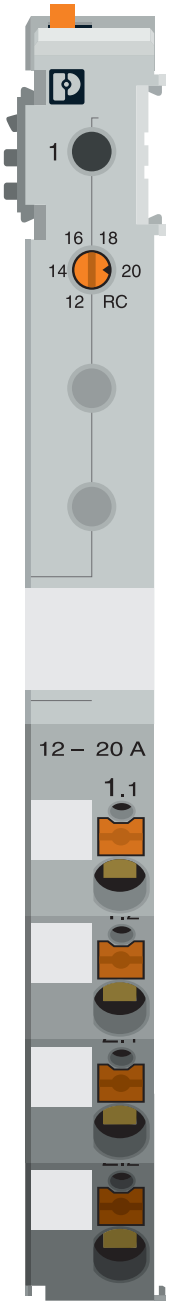

Application drawing

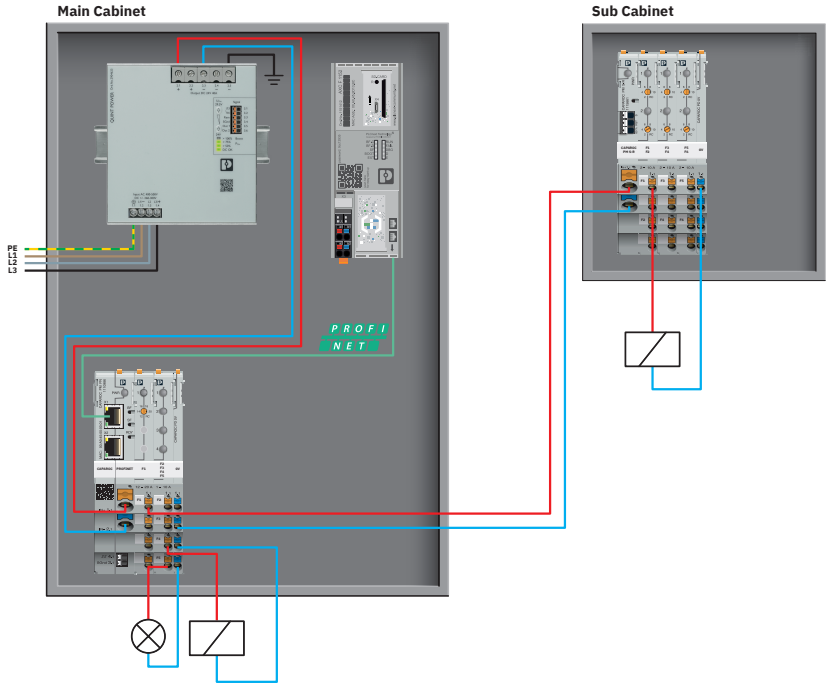


Diagram

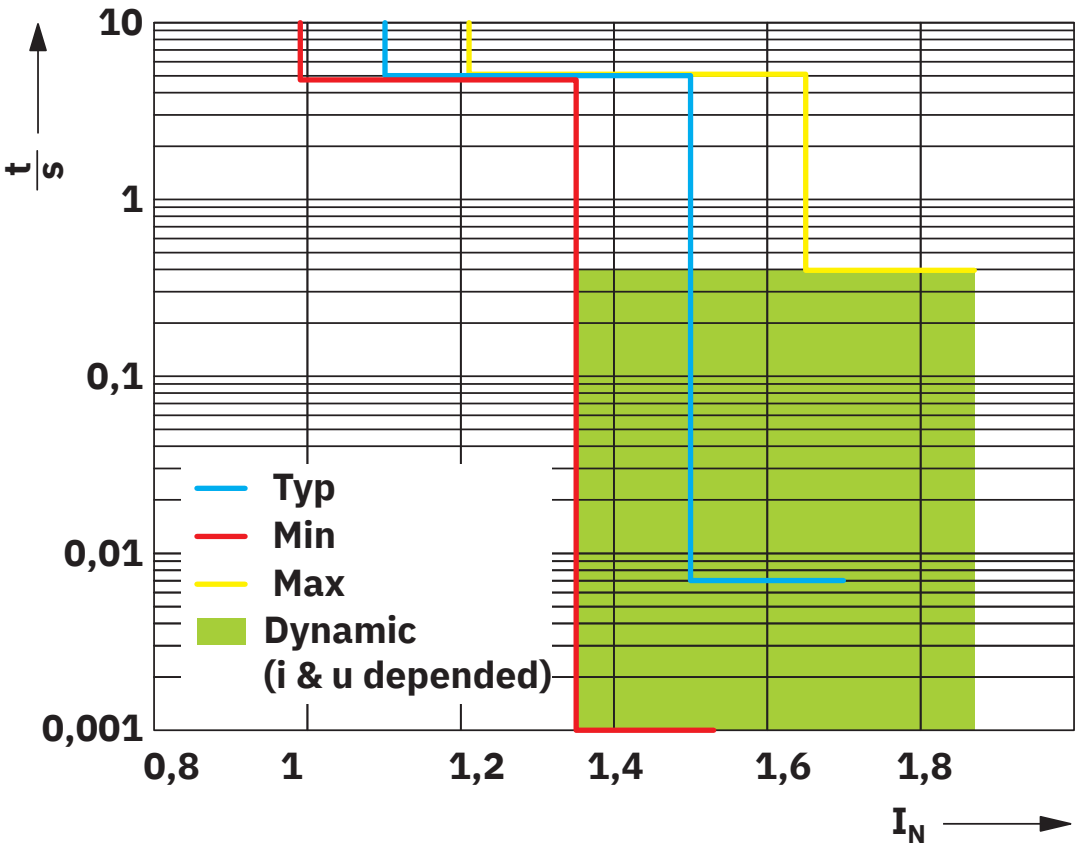

Diagram

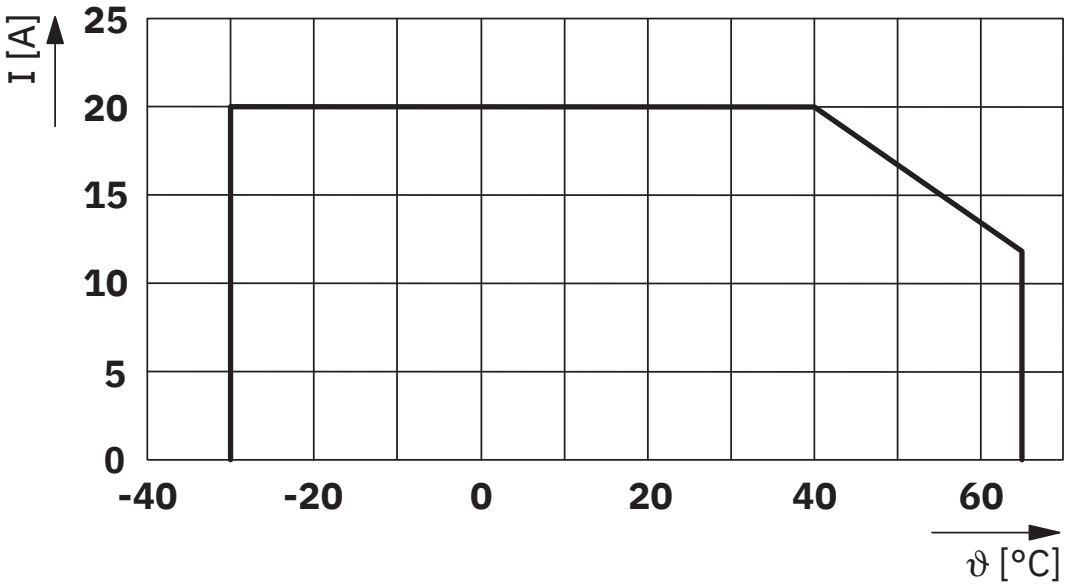


Max. permissible current in relation to the ambient temperature

Block diagram

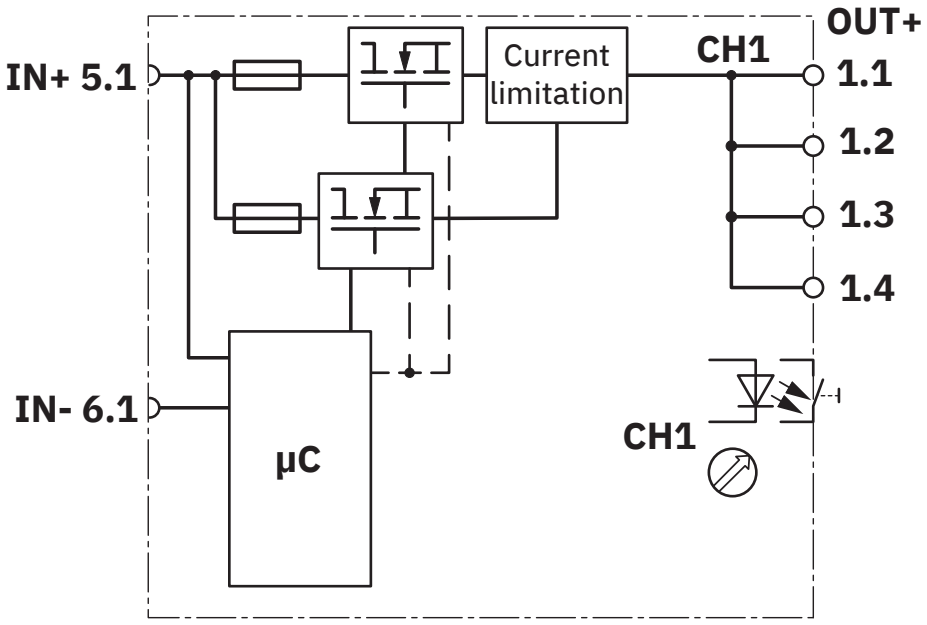

## Classifications

### ECLASS

| | |
|---|---|
| ECLASS-13.0 | 27140401 |
| ECLASS-15.0 | 27140401 |

### ETIM

| | |
|---|---|
| ETIM 10.0 | EC003538 |

### UNSPSC

| | |
|---|---|
| UNSPSC 21.0 | 39121400 |

## Environmental product compliance

EU RoHS

| | |
|---|---|
| Fulfills EU RoHS substance requirements | Yes |
| Exemption | 7(a), 7(c)-I |

China RoHS

| | |
|---|---|
| Environment friendly use period (EFUP) | EFUP-50 |
| | An article-related China RoHS declaration table can be found in the download area for the respective article under "Manufacturer declaration". For all articles with EFUP-E, no China RoHS declaration table issued and required. |

EU REACH SVHC

| | |
|---|---|
| REACH candidate substance (CAS No.) | Lead(CAS: 7439-92-1) |


Phoenix Contact 2026 © - all rights reserved
https://www.phoenixcontact.com



PHOENIX CONTACT Ltd
Halesfield 13, Telford
Shropshire, TF7 4PG
01952 681700
info@phoenixcontact.co.uk