CAPAROC PM S-R - Feed-in module

1115661

https://www.phoenixcontact.com/gb/products/1115661

Please be informed that the data shown in this PDF document is generated from our online catalog. Please find the complete data in the user documentation. Our general terms of use for downloads are valid.

CRA-READY



Power module with status output and reset input for supplying the CAPAROC circuit breaker system with 12 or 24 V DC. For DIN rail installation via the CAPAROC current rails.

Your advantages

- The benchmark that you can customize by selecting single signals and resets all the way to PROFINET communication
- Particularly easy operation for everyone with tool-free assembly, direct feed-in to the busbar, and clear operating states
- Exceptionally easy design-in thanks to the comprehensive digital data packet and PROFINET function blocks

ELEKTROGERÄTE RÜCKNAHME

Commercial data

Item number	1115661
Packing unit	1 pc
Minimum order quantity	1 pc
Sales key	CLA231
Product key	CLA231
GTIN	4063151040635
Weight per piece (including packing)	130 g
Weight per piece (excluding packing)	91.9 g

Country of origin	DE

Technical data

Notes

Note on application	As things stand now, we are preparing the product so that, as of December 11, 2027, it will comply with the requirements of the EU Cyber Resilience Act (CRA) based on the information currently available regarding the CRA.

General

Note	LABS release – in accordance with test specification VW PV 3. 10.7:2005-0
	When connecting the conductor, make sure that the CAPAROC modules are not pulled apart due to tensile force. Gaps must not be created between the modules.

Product properties

Product type	Device circuit breakers
Product family	CAPAROC
Type	Plug-in module
Number of slots	2

Insulation characteristics

Protection class	III
Pollution degree	2

Electrical properties

General

Operating voltage	10 V DC ... 30 V DC
Rated voltage	12 V DC
	24 V DC
Rated current I_N	45 A (Total current input)
Rated surge voltage	0.5 kV
Tripping method	E (electronic)
Dielectric strength	35 V DC (Load circuit)
Efficiency	> 99 %
Closed circuit current I_0	typ. 9 mA (no load at 24 V)
Power dissipation	typ. 0.22 W (no load at 24 V)
	< 1.5 W (in nominal operation at 24 V and 45 A)
Temperature derating	45 A (Total current at 40°C)
	30 A (Total current at 65 °C)
MTBF (IEC 61709, SN 29500)	18886912.65 h (at 25 °C with 21 % load)
	5907048.64 h (at 40°C with 34.25% load)
	933563.97 h (at 40°C with 100% load)
Voltage drop	0.03 V (at 45 A)

Load circuit

Undervoltage switch-off	≤ 9.2 V DC (active)
	≥ 10.2 V DC (inactive)
Overvoltage switch-off	≥ 30.5 V DC (active)
	≤ 29.5 V DC (inactive)

Reset

Input voltage range	7 V DC ... 30 V DC (Reset with falling edge)
Current consumption	typ. 0.5 mA (at 24 V DC)
Pulse length	≥ 50 ms
Stripping length	8 mm
Conductor cross-section rigid	0.2 mm² ... 1.5 mm²
Conductor cross-section AWG	24 ... 16
Conductor cross-section, flexible, with ferrule, with plastic sleeve	0.2 mm² ... 0.75 mm²
Conductor cross-section, flexible, with ferrule, without plastic sleeve	0.2 mm² ... 1.5 mm²

Status output

Output voltage	max. 30 V DC (Input voltage ±5% in the event of no error)
	0 V DC (Error)
Output current	max. 20 mA
Stripping length	8 mm
Conductor cross-section rigid	0.2 mm² ... 1.5 mm²
Conductor cross-section AWG	24 ... 16
Conductor cross-section, flexible, with ferrule, with plastic sleeve	0.2 mm² ... 0.75 mm²
Conductor cross-section, flexible, with ferrule, without plastic sleeve	0.2 mm² ... 1.5 mm²

Status output

Output voltage	max. 30 V DC (Input voltage ±5% when I >80% at at least one channel)
Output current	max. 20 mA
Stripping length	8 mm
Conductor cross-section rigid	0.2 mm² ... 1.5 mm²
Conductor cross-section AWG	24 ... 16
Conductor cross-section, flexible, with ferrule, with plastic sleeve	0.2 mm² ... 0.75 mm²
Conductor cross-section, flexible, with ferrule, without plastic sleeve	0.2 mm² ... 1.5 mm²

Connection data

Main circuit IN+

Connection method	Push-in connection
Stripping length	18 mm
Conductor cross-section rigid	0.5 mm² ... 16 mm²
Conductor cross-section AWG	20 ... 8
Conductor cross-section, flexible, with ferrule, with plastic sleeve	0.5 mm² ... 16 mm²
Conductor cross-section, flexible, with ferrule, without plastic	0.5 mm² ... 16 mm²

sleeve	

Main circuit IN-

Connection method	Push-in connection
Stripping length	18 mm
Conductor cross-section rigid	0.5 mm² ... 16 mm²
Conductor cross-section AWG	20 ... 8
Conductor cross-section, flexible, with ferrule, with plastic sleeve	0.5 mm² ... 16 mm²
Conductor cross-section, flexible, with ferrule, without plastic sleeve	0.5 mm² ... 16 mm²

Interfaces

Maximum system extension	≤ 20 (CAPAROC modules alignable)

Signaling

Power (PWR) LED green	lit (with no channel errors)
	lit (Supply voltage in the nominal range)
	flashing (3 x on deactivation of programming lock)
Power (PWR) LED red	lit (Supply voltage outside the nominal range)
Power (PWR) LED yellow	flashing (3 x on activation of programming lock)
Green signal LED	lit (with no channel errors)
	lit (Supply voltage in the nominal range)
Yellow signal LED	lit (when I > 80% at at least one channel)
Red signal LED	lit (with at least one channel error)
	lit (Supply voltage outside the nominal range)

Dimensions

Dimensional drawing	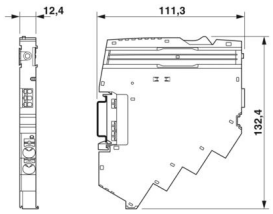
Width	12.4 mm
Height	132.4 mm
Depth	111.3 mm (incl. DIN rail 7.5 mm)

Material specifications

Color	light gray (RAL 7035)
Material	PA 6
	PA 6
	PA 6
	PC
Flammability rating according to UL 94	V-0

Environmental and real-life conditions

Ambient conditions

Degree of protection	IP20
Ambient temperature (operation)	-30 °C ... 65 °C
Ambient temperature (storage/transport)	-40 °C ... 70 °C
Altitude	≤ 4000 m (amsl)
Humidity test	96 h, 95 % RH, 40 °C
Shock (operation)	30g (11 ms period, half-sine shock pulse, according to IEC 60068-2-27)
	25g (6 ms duration, half-sine shock pulse in accordance with IEC 60068-2-27, continuous shock)
Vibration (operation)	5g (10 Hz ... 150 Hz / 10 cycles / axis / X, Y, Z)

Approvals

UL approval

Identification	UL/C-UL Listed UL 508
	UL 121201 Class I, Division 2, Groups A, B, C, D, T4A

Corrosive gas test

Identification	ISA S71.04.2013 G3 Harsh Group A

Standards and regulations

Standards/specifications	EN 61000-6-2
Note	EMC – Immunity for industrial areas
Standards/specifications	EN 61000-6-3
Note	EMC – Emission for residential, business and commercial properties and small operations
Standards/specifications	EN 60068-2-78
Note	Environmental influences – Moisture and heat, constant
Standards/specifications	EN 50178
Note	Equipping power installations with electronic equipment
Standards/specifications	EN 60068-2-6
Note	Environmental influences – Vibrations (sinusoidal)
Standards/specifications	EN 60068-2-27
Note	Environmental influences – Shocks

Mounting

Mounting type	pluggable onto CAPAROC CR… current rail

Drawings

Dimensional drawing

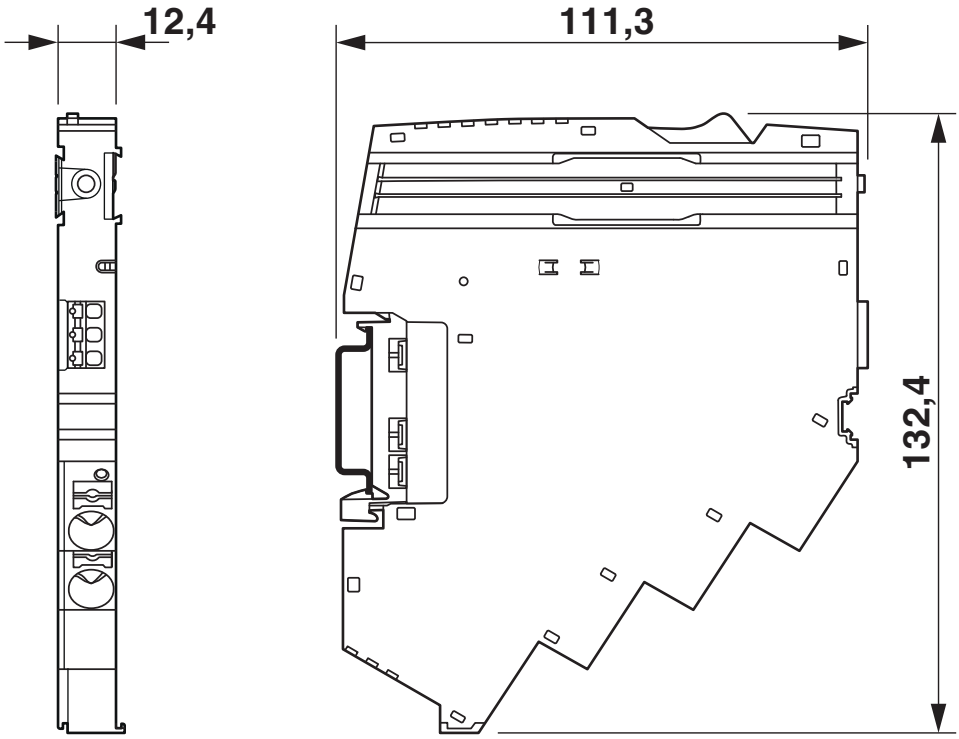

Product drawing



Application drawing

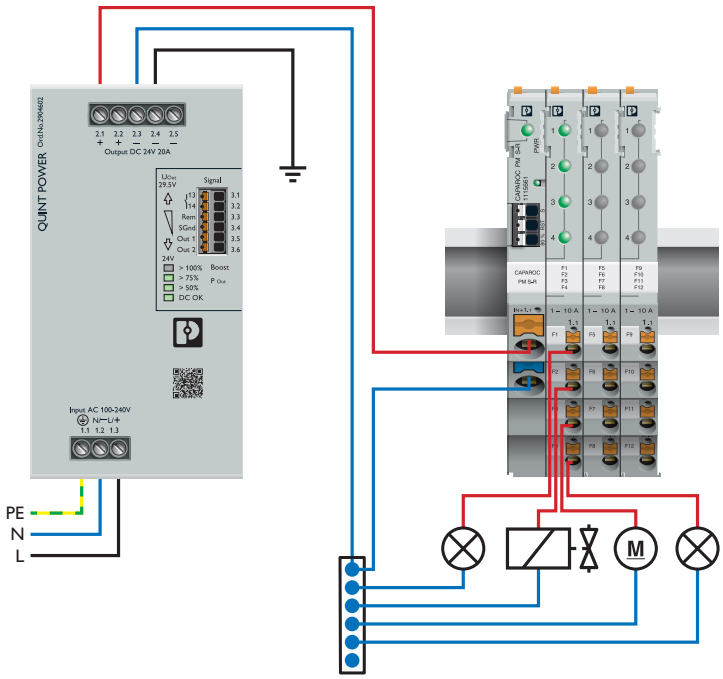

Application drawing

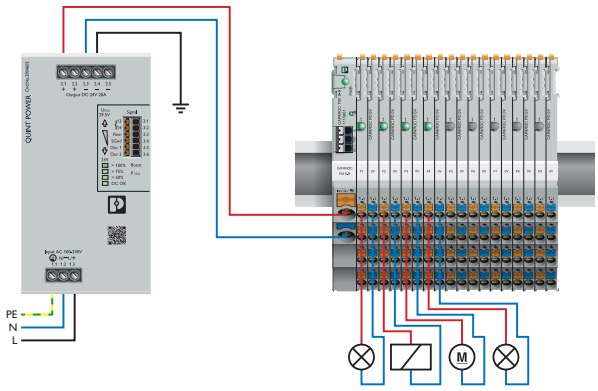

Schematic diagram

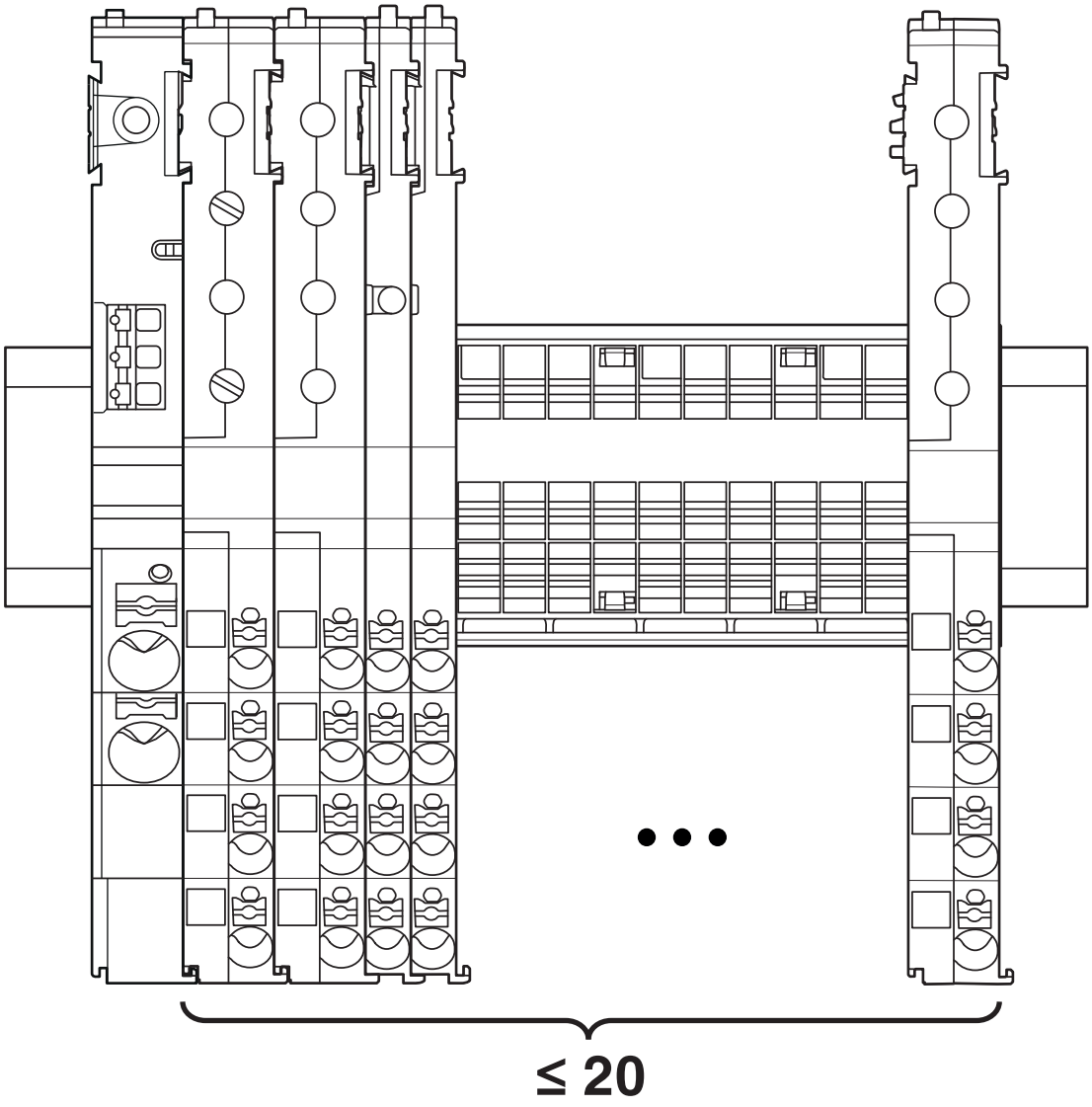

When using the power module with status output and reset input (CAPAROC PM S-R), max. 20 circuit breaker modules can be set. Any number of extra potential distribution modules can be added.

Diagram

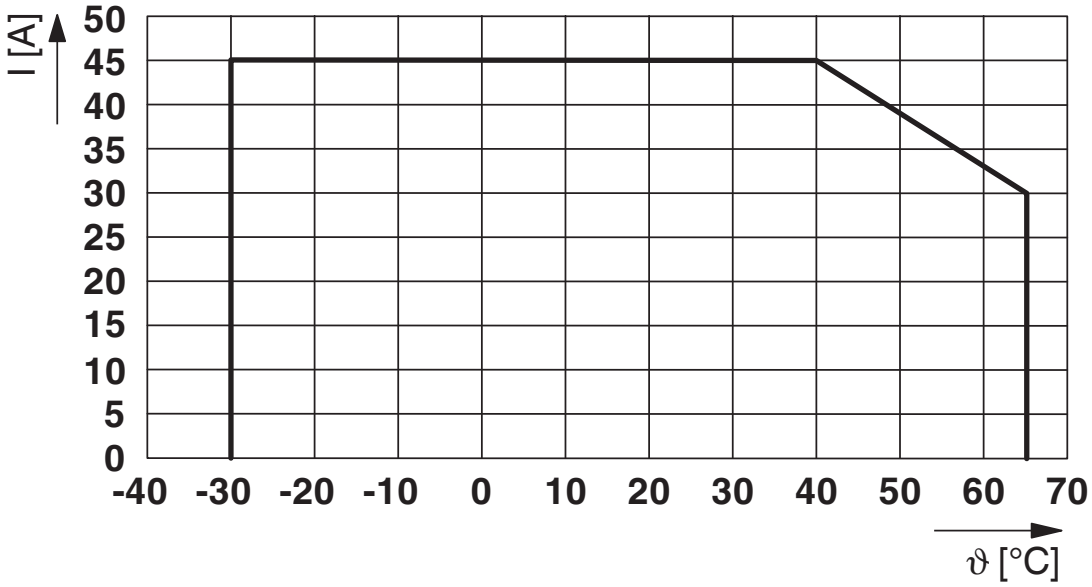

Max. permissible current in relation to the ambient temperature

Block diagram

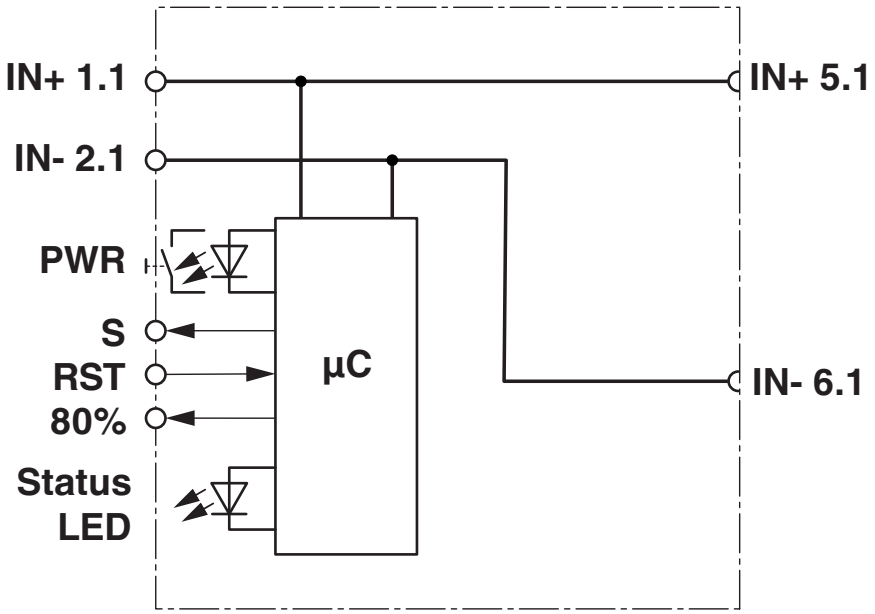

Approvals

To download certificates, visit the product detail page: https://www.phoenixcontact.com/gb/products/1115661

UL Listed
Approval ID: E123528

cUL Listed
Approval ID: E123528

cUL Listed
Approval ID: FILE E 483407

UL Listed
Approval ID: FILE E 483407

Classifications

ECLASS

ECLASS-13.0	27140401
ECLASS-15.0	27140401

ETIM

ETIM 10.0	EC003538

UNSPSC

UNSPSC 21.0	39121400

Environmental product compliance

EU RoHS

Fulfills EU RoHS substance requirements	Yes
Exemption	7(a), 7(c)-I

China RoHS

Environment friendly use period (EFUP)	EFUP-50
	An article-related China RoHS declaration table can be found in the download area for the respective article under "Manufacturer declaration". For all articles with EFUP-E, no China RoHS declaration table issued and required.

EU REACH SVHC

REACH candidate substance (CAS No.)	Lead(CAS: 7439-92-1)
SCIP	6cd7ff5b-907b-4f8c-88cb-b2e6402053a9

EF3.1 Climate Change

CO2e kg	6.825 kg CO2e

Phoenix Contact 2026 © - all rights reserved
https://www.phoenixcontact.com

PHOENIX CONTACT Ltd
Halesfield 13, Telford
Shropshire, TF7 4PG
01952 681700
info@phoenixcontact.co.uk