SINGLE HOUSING TRANSPARENT DISC - Empty enclosure

1113843

https://www.phoenixcontact.com/gb/products/1113843

Please be informed that the data shown in this PDF document is generated from our online catalog. Please find the complete data in the user documentation. Our general terms of use for downloads are valid.



Empty enclosure for sealing unused panel cutouts with transparent face-plate

Commercial data

Item number	1113843
Packing unit	1 pc
Minimum order quantity	1 pc
Sales key	DTMCAA
Product key	DTMCAA
GTIN	4063151036874
Weight per piece (including packing)	55 g
Weight per piece (excluding packing)	44.1 g
Customs tariff number	85389099
Country of origin	DE

Technical data

Notes

Note on application

Note on application	Only for industrial use

Product properties

Product type	Housing

SINGLE HOUSING TRANSPARENT DISC - Empty enclosure

1113843

https://www.phoenixcontact.com/gb/products/1113843

Drawings

Dimensional drawing

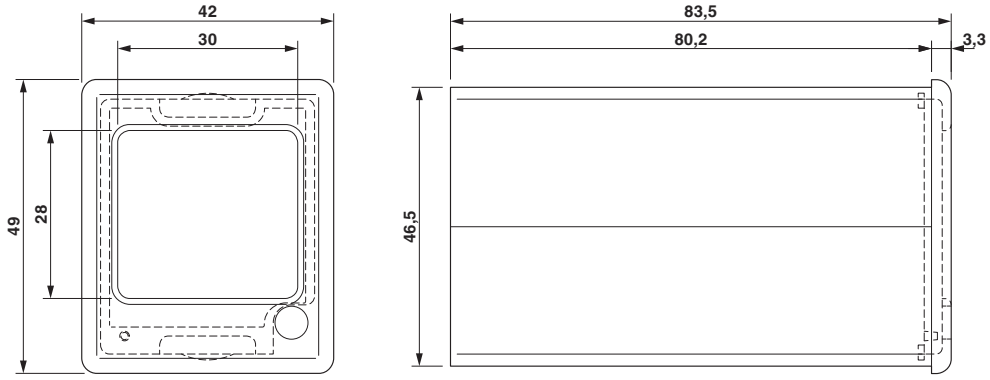

Schematic diagram

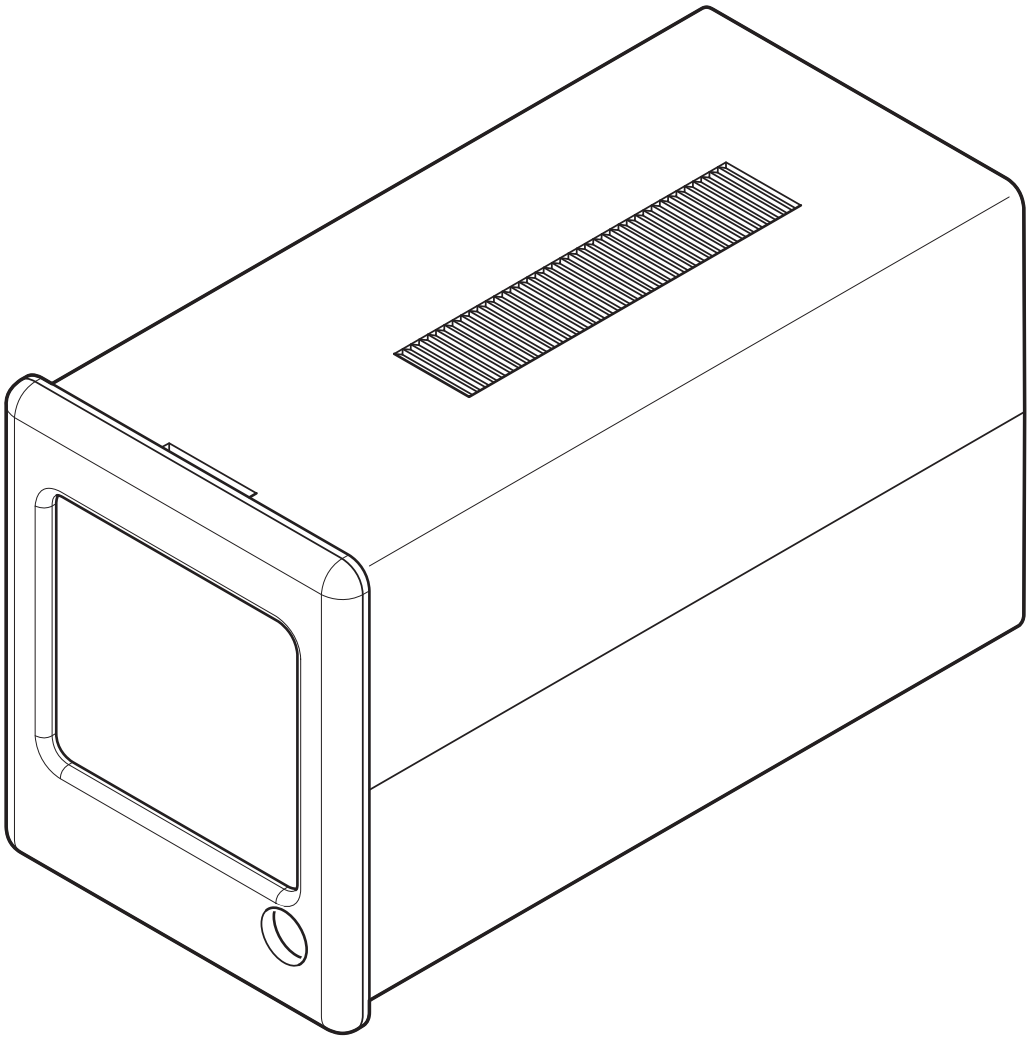

Classifications

ECLASS

ECLASS-13.0	27371692
ECLASS-15.0	27371692

ETIM

ETIM 10.0	EC002586

UNSPSC

UNSPSC 21.0	39122300

Environmental product compliance

China RoHS

Environment friendly use period (EFUP)	EFUP-E
	No hazardous substances above the limits

EU REACH SVHC

REACH candidate substance (CAS No.)	No substance above 0.1 wt%

EF3.1 Climate Change

CO2e kg	40.208 kg CO2e

Phoenix Contact 2026 © - all rights reserved
https://www.phoenixcontact.com

PHOENIX CONTACT Ltd
Halesfield 13, Telford
Shropshire, TF7 4PG
01952 681700
info@phoenixcontact.co.uk