AXL SE DOR2 W 230 - Relay module

1105562

https://www.phoenixcontact.com/gb/products/1105562

Please be informed that the data shown in this PDF document is generated from our online catalog. Please find the complete data in the user documentation. Our general terms of use for downloads are valid.

CRA-READY



Axioline Smart Elements, Relay module, Relay outputs: 2 (floating), Changeover contact, 220 V DC, 230 V AC, degree of protection: IP20; The product is being prepared for compliance with the Cyber Resilience Act (CRA).

Product description

You can integrate Axioline Smart Elements into systems with the Smart Element interface. This Smart Element has two relay changeover contacts that are independent of each other and floating. You can install low-voltage and extra-low-voltage modules directly next to each other on one Axioline F backplane.

Your advantages

- 2 mono-stable relays
- Floating connections for 2 actuators
- Switching current per channel: 6 A, maximum
- Device rating plate stored

ELEKTROGERÄTE RÜCKNAHME

Commercial data

Item number	1105562
Packing unit	1 pc
Minimum order quantity	1 pc

Sales key	DRIB34
Product key	DRIB34
GTIN	4055626989013
Weight per piece (including packing)	44 g
Weight per piece (excluding packing)	42.95 g
Customs tariff number	85364900
Country of origin	DE

Technical data

Dimensions

Dimensional drawing	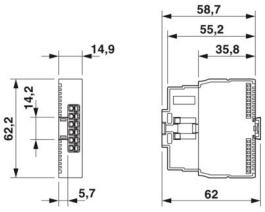
Width	14.9 mm
Height	62.2 mm
Depth	62 mm

Notes

Note on application	Only for industrial use
Note on application	As things stand now, we are preparing the product so that, as of December 11, 2027, it will comply with the requirements of the EU Cyber Resilience Act (CRA) based on the information currently available regarding the CRA.

Mounting

Mounting type	Plug-in mounting (Smart Element slot)
Mounting position	See the system in which the Smart Element is used.

Material specifications

Color (Housing)	gray (RAL 7042)

Interfaces

Smart Element interface

Number of interfaces	1
Connection method	Card edge connector
Start time until ready to operate	< 500 ms

System properties

Programming data

Process data channel	8 bit
Input address area	0 Byte
Output address area	1 Byte

Fieldbus data telegram (PROFIBUS)

Required parameter data	9 Byte
Required configuration data	6 Byte

Output data

Relay

Number of outputs	2 (floating)
Connection method	Push-in connection
Connection technology	2-conductor
Contact switching type	Changeover contact
Contact material	$AgSnO_2$, hard gold-plated
Nominal output voltage (DC)	220 V DC
Nominal output voltage (AC)	230 V AC
Output voltage range (DC)	24 V DC ... 220 V DC -20 % / +15 %
Output voltage range (AC)	24 V AC ... 230 V AC -20 % / +15 % (50/60 Hz)
Inrush current	max. 10 A (for 4 s)
	max. 20 A (for 0.02 s)
Switching current	max. 6 A (up to 250 V AC, cos phi = 0.75 ... 0.8)
	max. 6 A (up to 30 V DC, N/O contact, general use)
	max. 3 A (up to 30 V DC, N/C contact, general use)
	max. 580 mA (at 48 V DC)
	max. 250 mA (at 110 V DC)
	max. 125 mA (at 220 V DC)
	max. 220 mA DC (125 V DC, L/R ≤ 50 ms)
	max. 110 mA DC (250 V DC, L/R ≤ 50 ms)
Switching power	max. 1500 VA (AC applications up to 55°C, observe derating above that)
	max. 180 W (up to 30 V DC, N/O contact, general use)
	max. 90 W (up to 30 V DC, N/C contact, general use)
	max. 28 W (above 30 V DC)
	For further DC values, see DC load limit curve.
Switching frequency	0.1 Hz (with load)
	20 Hz (without load)
Switching capacity in accordance with IEC 60947-5-1	3 A (24 V (AC15))
	3 A (120 V (AC15))
	3 A (230 V (AC15))
	2 A (24 V (DC13), L/R = 100 ms)
	0.2 A (110 V (DC13), L/R = 44 ms)
	0.1 A (220 V (DC13), L/R = 44 ms)
Switching capacity in accordance with UL/CSA 61010-2-201	5 A (AC, B300, up to max. 55°C)
	1 A (DC, R300, up to max. 60°C)
Switching frequency	max. 6 (per minute)
Typical response time	8 ms
Bouncing time	typ. 2 ms (N/O contact)
Typical release time	< 12 ms
Service life electrical	5x 10^4 switching cycles
Mechanical service life	20x 10^6 cycles
Common potentials	all contacts floating

Product properties

Product type	I/O component
Product family	Axioline Smart Elements
Type	modular
Mounting position	See the system in which the Smart Element is used.
Special properties	The product is being prepared for compliance with the Cyber Resilience Act (CRA)

Insulation characteristics

Overvoltage category	III (EN 61010-2-201/IEC 61010-2-201)
Pollution degree	2 (IEC 60664-1, EN 60664-1)

Electrical properties

Maximum power dissipation for nominal condition	2 W

Potentials: Communications power supply of the Smart Elements (U_{SE})

Supply voltage	using card edge connectors

Potentials: I/O supply (U_P)

Supply voltage	24 V DC (using card edge connectors)
Supply voltage range	19.2 V DC ... 30 V DC (including all tolerances, including ripple)
Current draw	typ. 36 mA (18 mA per relay, all contacts floating)
Protective circuit	Surge protection; See the system in which the Smart Element is used.
	Reverse polarity protection; parallel diode
Protection	See the system in which the Smart Element is used.

Electrical isolation/isolation of the voltage ranges

Test voltage: Communications supply / 24 V supply (I/O)	500 V AC, 50 Hz, 1 min
Test voltage: Communications supply / functional ground	500 V AC, 50 Hz, 1 min
Test voltage: 24 V supply (I/O) / functional ground	500 V AC, 50 Hz, 1 min
Test voltage: Supply logic / relay contact	4 kV
Test voltage: 24 V supply (devices) / relay contact	4 kV
Test voltage: Relay contact / functional ground	4 kV

Connection data

Connection technology

Connection name	I/O
Note on the connection method	Please observe the information provided on conductor cross-sections in the “Axioline Smart Elements” user manual.
	When selecting the cables, observe the permissible operating temperature in accordance with IEC or UL.

I/O

Connection method	Push-in connection
Note on the connection method	Please observe the information provided on conductor cross-sections in the “Axioline Smart Elements” user manual.

	When selecting the cables, observe the permissible operating temperature in accordance with IEC or UL.
Conductor cross-section, rigid	0.25 mm² ... 1.5 mm²
Conductor cross-section, flexible	0.25 mm² ... 1.5 mm²
Conductor cross-section AWG	24 ... 16
Conductor cross-section, flexible, with ferrule, with plastic sleeve	0.25 mm² ... 0.75 mm²
Conductor cross-section, flexible, with ferrule, without plastic sleeve	0.25 mm² ... 1.5 mm²
	0.25 mm² ... 1.5 mm²
Conductor cross-section, flexible, with ferrule, with plastic sleeve	0.25 mm² ... 0.75 mm²
Stripping length	8 mm

Environmental and real-life conditions

Ambient conditions

Ambient temperature (operation)	-25 °C ... 60 °C
Degree of protection	IP20
Air pressure (operation)	80 kPa ... 106 kPa
Air pressure (storage/transport)	70 kPa ... 106 kPa (up to 3000 m above sea level)
Ambient temperature (storage/transport)	-40 °C ... 85 °C
Permissible humidity (operation)	5 % ... 95 % (non-condensing)
Permissible humidity (storage/transport)	5 % ... 95 % (non-condensing)

Mechanical test

Vibration resistance in accordance with EN 60068-2-6/IEC 60068-2-6	1g
Shock in accordance with EN 60068-2-27/IEC 60068-2-27	10g (contact interruption) / 5g (contact closure)

Drawings

Dimensional drawing

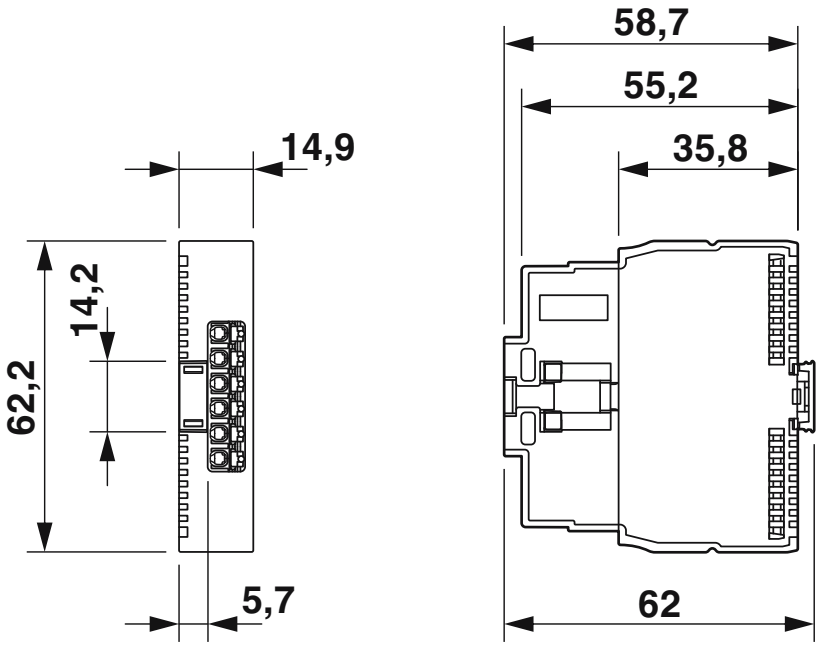

Dimensions (in mm)

Connection diagram

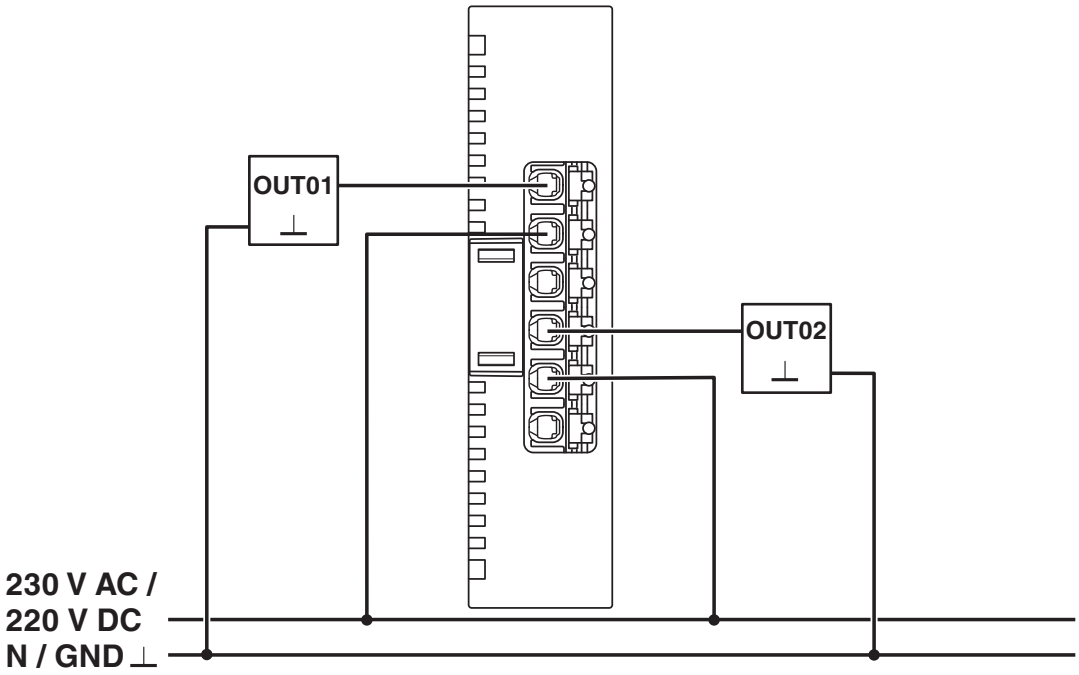

Connection of actuators

Block diagram

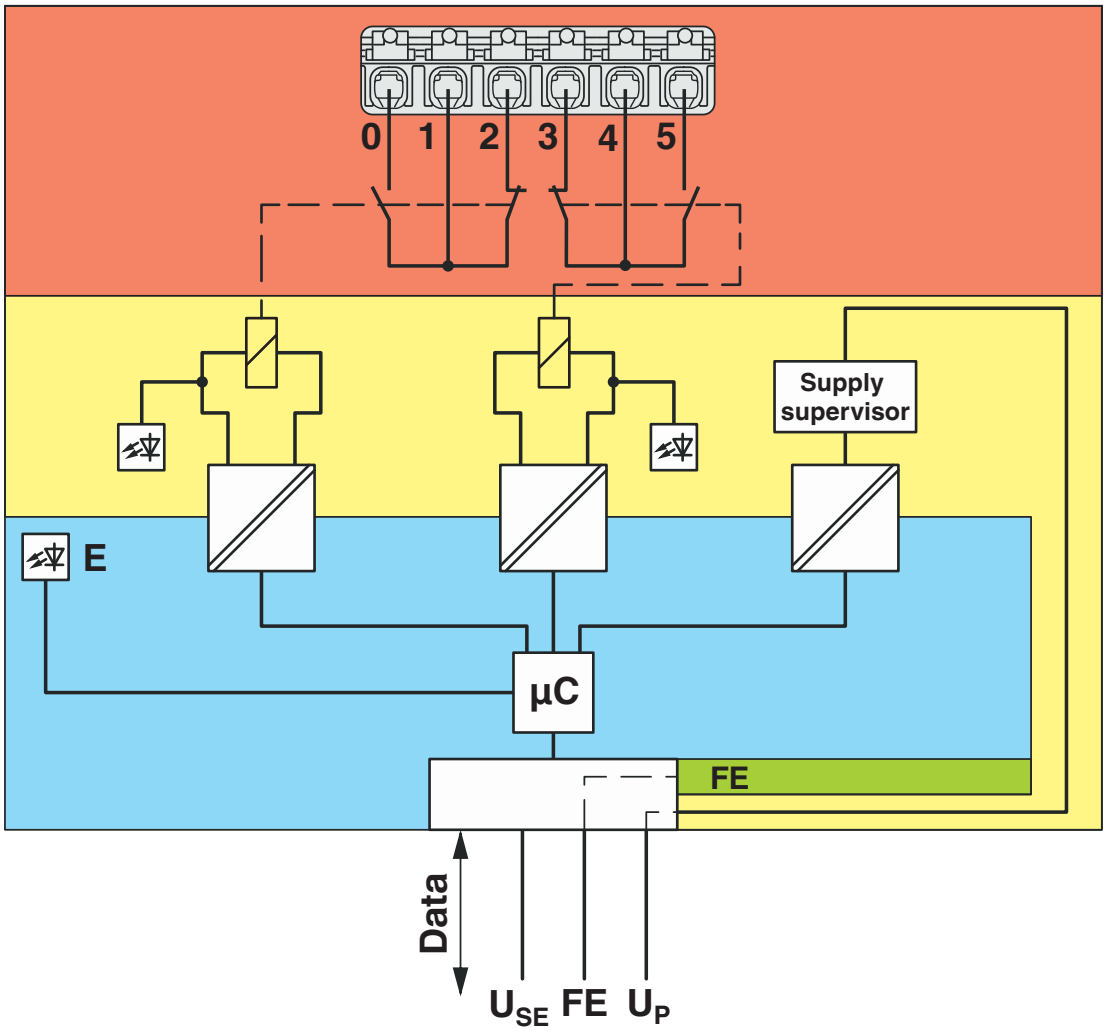

Internal wiring of the terminal points

Approvals

To download certificates, visit the product detail page: https://www.phoenixcontact.com/gb/products/1105562

cULus Listed
Approval ID: E238705

cULus Listed
Approval ID: E238705

Classifications

ECLASS

ECLASS-13.0	27242604
ECLASS-15.0	27242604

ETIM

ETIM 10.0	EC001599

UNSPSC

UNSPSC 21.0	32151600

Environmental product compliance

EU RoHS

Fulfills EU RoHS substance requirements	Yes
Exemption	7(a), 7(c)-I

China RoHS

Environment friendly use period (EFUP)	EFUP-50
	An article-related China RoHS declaration table can be found in the download area for the respective article under "Manufacturer declaration". For all articles with EFUP-E, no China RoHS declaration table issued and required.

EU REACH SVHC

REACH candidate substance (CAS No.)	Lead(CAS: 7439-92-1)
SCIP	803dadcf-6223-4d53-89fd-02c84ab2202c

EF3.1 Climate Change

CO2e kg	2.525 kg CO2e

Phoenix Contact 2026 © - all rights reserved
https://www.phoenixcontact.com

PHOENIX CONTACT Ltd
Halesfield 13, Telford
Shropshire, TF7 4PG
01952 681700
info@phoenixcontact.co.uk