PLC-BPT- 12DC/ 1IC/ACT - Relay base

1090868

https://www.phoenixcontact.com/gb/products/1090868

Please be informed that the data shown in this PDF document is generated from our online catalog. Please find the complete data in the user documentation. Our general terms of use for downloads are valid.



14 mm PLC basic terminal block for high switch-on currents with push-in connection, without relay or solid-state relay, for mounting on DIN rail NS 35/7,5, with load return line connection (BB), 1 N/O contact, input voltage: 12 V DC

Commercial data

Item number	1090868
Packing unit	10 pc
Minimum order quantity	10 pc
Sales key	DK6211
Product key	DK6211
GTIN	4055626902609
Weight per piece (including packing)	57.7 g
Weight per piece (excluding packing)	44.1 g
Customs tariff number	85366990
Country of origin	DE

Technical data

Notes

Notes on operation	Separating plate PLC-ATP must be installed for voltages larger than 250 V (L1, L2, L3) between identical terminal blocks in adjacent modules. Potential bridging is then carried out with FBST 8-PLC... or FBST 500....
Notes on operation	The PLC-ATP divider plate should be installed for safe isolation between adjacent modules
Assembly note	The PLC-ATP divider plate is required at the start and end of every PLC terminal strip.
Notes on operation	The system installer must ensure the touch protection of the product (at voltages > 25 V AC/60 V DC). The product is a built-in device without protection against direct contact.

Product properties

Product type	Relay socket
Product family	PLC-INTERFACE
Application	high inrush currents
Set comprises	1078801 PLC-RPT- 12DC/ 1IC/ACT
Operating mode	100% operating factor
Compatible components	Miniature relay, 2904475 REL-MR- 12DC/1IC, 1081616 REL-MR- 12DC/1ICT

Insulation characteristics

Insulation	Safe isolation, reinforced insulation
Overvoltage category	III
Pollution degree	3

Electrical properties

Test voltage relay winding/relay contact	4 kV_{rms} (50 Hz, 1 min.)
Rated insulation voltage	250 V AC
Rated surge voltage	6 kV

Input data

Nominal input voltage U_N	12 V DC
Status display	LED (yellow)
Protective circuit	Freewheeling diode
	Polarity protection diode
Nominal input voltage U_N	12 V DC

Output data

Compatible components	Miniature relay, 2904475 REL-MR- 12DC/1IC, 1081616 REL-MR- 12DC/1ICT

Connection data

Connection method	Push-in connection

Stripping length	10 mm
Conductor cross-section rigid	0.14 mm² ... 2.5 mm²
Conductor cross-section flexible	0.14 mm² ... 2.5 mm²
	0.2 mm² ... 2.5 mm² (Single ferrule)
	2x 0.5 mm² ... 1 mm² (TWIN ferrule)
Conductor cross-section AWG	26 ... 14

Dimensions

Width	14 mm
Height	80 mm
Depth	94 mm

Material specifications

Color	gray (RAL 7042)
Flammability rating according to UL 94 (Housing)	V0 (Housing)

Environmental and real-life conditions

Ambient conditions

Degree of protection	IP20
Degree of protection (Installation location)	≥ IP54 (Installation location)
Ambient temperature (operation)	-40 °C ... 60 °C
Ambient temperature (storage/transport)	-40 °C ... 85 °C
Altitude	≤ 2000 m

Approvals

CE

Certificate	CE-compliant

UKCA

Certificate	UKCA-compliant

Shipbuilding approval

Certificate	TAE0000196

Corrosive gas test

Identification	ISA-S71.04. G3 Harsh Group
	EN 60068-2-60

Shipbuilding data

Temperature	D
Humidity	A
Vibration	B/C
EMC	B
Enclosure	Required protection according to the Rules shall be provided upon installation on board

EMC data

Electromagnetic compatibility	Conformance with EMC directive
Low Voltage Directive	Conformance with Low Voltage Directive

Standards and regulations

Standards/regulations	EN 50178
	EN 61810-1

Mounting

Mounting type	DIN rail mounting
Assembly note	in rows with zero spacing
Mounting position	any

Drawings

Circuit diagram

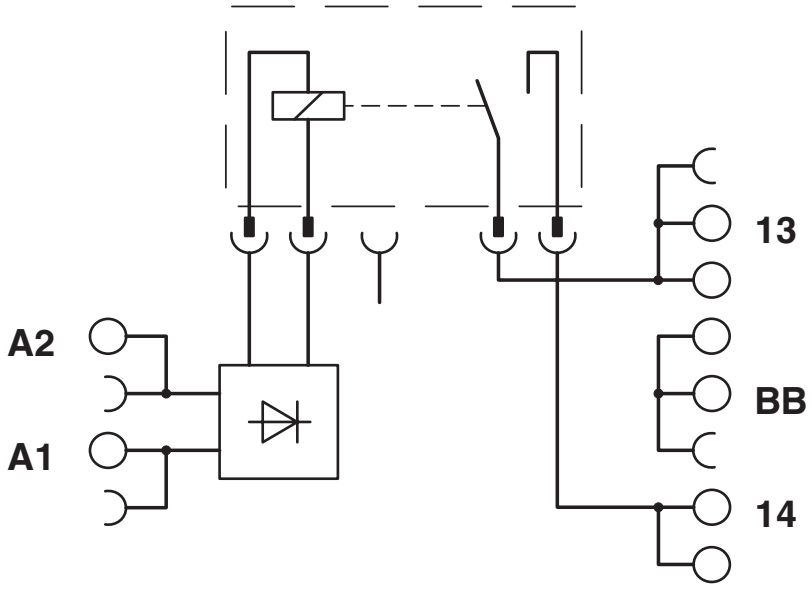

Classifications

UNSPSC

UNSPSC 21.0	39122300

Environmental product compliance

EU RoHS

Fulfills EU RoHS substance requirements	Yes
Exemption	7(a), 7(c)-I

China RoHS

Environment friendly use period (EFUP)	EFUP-50
	An article-related China RoHS declaration table can be found in the download area for the respective article under "Manufacturer declaration". For all articles with EFUP-E, no China RoHS declaration table issued and required.

EU REACH SVHC

REACH candidate substance (CAS No.)	Hexahydromethylphthalic anhydride(CAS: n/a)
	Lead(CAS: 7439-92-1)
SCIP	ba937510-784c-4f48-b97c-c043eecbd602

Phoenix Contact 2026 © - all rights reserved
https://www.phoenixcontact.com

PHOENIX CONTACT Ltd
Halesfield 13, Telford
Shropshire, TF7 4PG
01952 681700
info@phoenixcontact.co.uk