STEP3-PS/1AC/24DC/1.3/PT - Power supply

1088494

https://www.phoenixcontact.com/gb/products/1088494

Please be informed that the data shown in this PDF document is generated from our online catalog. Please find the complete data in the user documentation. Our general terms of use for downloads are valid.



Primary-switched power supply unit STEP POWER, Push-in connection, DIN rail or direct mounting, input: 1-phase, output: 24 V DC / 1.3 A

Product description

STEP POWER power supplies for distribution boards. The STEP POWER power supplies with Push-in connection technology are the professional solution for intelligent building automation. The compact devices are economical, space-saving, and flexible in application.

Your advantages

- Energy savings with the highest level of efficiency in no-load and part-load operation (Efficiency Level VI)
- Space savings in the control cabinet due to the narrow design combined with increased performance (up to 100%)
- Approval for household purposes (EN 60335) allows use in domestic applications
- Quick and easy startup with tool-free Push-in connection technology at a 45° angle with double terminal points
- Flexible mounting: Snap onto a DIN rail or screw onto a level surface

Commercial data

Item number	1088494
Packing unit	1 pc
Minimum order quantity	1 pc
Sales key	CMPH13
Product key	CMPH13
GTIN	4055626890609
Weight per piece (including packing)	171 g
Weight per piece (excluding packing)	170 g

Customs tariff number	85044095
Country of origin	VN

Technical data

Input data

AC operation

Supply system configuration	Star network (TN, TT, IT (PE))
Input voltage range	100 V AC ... 240 V AC -15 % ... +10 %
Typical national grid voltage	120 V AC
	230 V AC
Voltage type of supply voltage	AC
Inrush current	typ. 22 A
Inrush current integral (I^2t)	typ. 0.27 A^2s
Frequency range (f_N)	50 Hz ... 60 Hz ±10 %
Mains buffering time	typ. 20 ms (120 V AC)
	typ. 100 ms (230 V AC)
Current consumption	0.59 A (100 V AC)
	0.33 A (240 V AC)
Protective circuit	Transient surge protection; Varistor
Switch-on time	typ. 2 s
Device mains fuse	2 A internal (device protection), slow-blow
Recommended breaker for input protection	6 A ... 16 A (Characteristics B, C, D, K)
Discharge current to PE	< 0.25 mA

DC operation

Input voltage range	110 V DC ... 250 V DC -20 % ... +40 %
Voltage type of supply voltage	DC
Current consumption	0.31 A (110 V DC)
	0.13 A (250 V DC)

Output data

Efficiency	> 87.5 % (120 V AC)
	> 88.5 % (230 V AC)
Efficiency Level	VI
Nominal output voltage	24 V DC
Nominal output current (I_N)	1.3 A
Short-circuit-proof	yes
No-load proof	yes
Derating	> 50 °C ... 70 °C (2 % / K)
Crest factor	typ. 3.45
	typ. 4.32
Output power (P_N)	30 W
Connection in parallel	yes, for increasing power and redundancy with diode
Connection in series	yes, for increased output voltage
Feedback voltage resistance	≤ 35 V DC

Protection against overvoltage at the output (OVP)	< 35 V DC
Residual ripple	typ. 100 mV_{PP}
Control deviation	< 0.5 % (Static load change 10 % ... 90 %)
	< 3 % (Dynamic load change 10 % ... 90 %, (10 Hz))
	< 0.1 % (change in input voltage ±10 %)
Rise time	typ. 100 ms (U_{Out} = 10 % ... 90 %)
Minimum no-load power dissipation	< 0.1 W (120 V AC)
Maximum no-load power dissipation	< 0.1 W (230 V AC)
Minimum nominal load power dissipation	< 4.4 W (120 V AC)
Power loss nominal load max.	< 3.9 W (230 V AC)
Integrated fuse protection	no
Fuse protection (secondary side)	electronic

Connection data

Input

Position	1.x

Connection technology: Positions

Position marking	1.1, 1.2 (L), 1.3, 1.4 (N)

Conductor connection

Connection method	Push-in connection
rigid (Terminal block)	0.2 mm² ... 2.5 mm²
rigid (recommended)	1 mm² (recommended)
flexible (Klemme)	0.2 mm² ... 2.5 mm²
flexible (empfohlen)	1 mm² (recommended)
flexible with ferrule without plastic sleeve (Terminal block)	0.25 mm² ... 2.5 mm²
flexible with ferrule without plastic sleeve (recommended)	1 mm² (recommended)
flexible with ferrule with plastic sleeve (Terminal block)	0.25 mm² ... 1 mm²
flexible with ferrule with plastic sleeve (recommended)	1 mm² (recommended)
AWG (recommended)	17
AWG (Terminal block)	24 ... 12 (Cu)
Stripping length (starr/flexibel)	10 mm (rigid/flexible)
Stripping length (Aderendhülse)	10 mm (Ferrule)

Output

Position	2.x

Connection technology: Positions

Position marking	2.1, 2.2 (+), 2.3, 2.4 (-)

Conductor connection

Connection method	Push-in connection
rigid (Terminal block)	0.2 mm² ... 2.5 mm²
rigid (recommended)	1 mm² (recommended)
flexible (Klemme)	0.2 mm² ... 2.5 mm²

flexible (empfohlen)	1 mm² (recommended)
flexible with ferrule without plastic sleeve (Terminal block)	0.25 mm² ... 2.5 mm²
flexible with ferrule without plastic sleeve (recommended)	1 mm² (recommended)
flexible with ferrule with plastic sleeve (Terminal block)	0.25 mm² ... 1 mm²
flexible with ferrule with plastic sleeve (recommended)	1 mm² (recommended)
AWG (recommended)	17
AWG (Terminal block)	24 ... 12 (Cu)
Stripping length (starr/flexibel)	10 mm (rigid/flexible)
Stripping length (Aderendhülse)	10 mm (Ferrule)

Signaling

LED signaling

Types of signaling	LED
Signal threshold	> 0,9 x U_N (U_N = 24 V DC) (LED lights up green)
	< 0,9 x U_N (U_N = 24 V DC) (LED off)

Electrical properties

Number of phases	1
Insulation voltage input/output	4 kV AC (type test)
	3.75 kV AC (routine test)

Product properties

Product type	Power supply
Product family	STEP POWER
MTBF (IEC 61709, SN 29500)	> 3100000 h (25 °C)
	> 1600000 h (40 °C)
	> 1000000 h (50 °C)
Environmental protection directive	RoHS Directive 2011/65/EU
	WEEE
	Reach

Insulation characteristics

Protection class	II (in closed control cabinet)
Overvoltage category (EN 61010-1)	II (≤ 4000 m)
Overvoltage category (EN 62477-1)	III (≤ 2000 m)
Degree of pollution	2

Dimensions

Item dimensions

Width	36 mm
Height	90 mm
Depth	61 mm
Depth (Device depth (DIN rail mounting))	55 mm (Device depth (DIN rail mounting))

Dimensional drawing	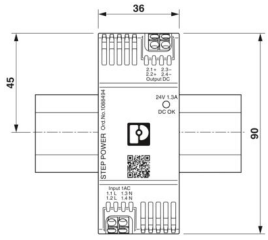
Horizontal pitch	2 HP (DIN 43880)

Installation dimensions

Installation distance right/left	0 mm / 0 mm
Installation distance top/bottom	30 mm / 30 mm

Mounting

Mounting type	DIN rail or direct mounting
Assembly note	alignable: 0 mm horizontally, 30 mm vertically
Mounting position	horizontal DIN rail NS 35, EN 60715
With protective coating	no

Material specifications

Flammability rating according to UL 94	V0 (Housing, terminal blocks, base latches)
Housing material	Plastic
Housing material	PC
Foot latch material	Polyamid

Environmental and real-life conditions

Ambient conditions

Degree of protection	IP20
Ambient temperature (operation)	-10 °C ... 70 °C (Derating: > 50 °C; 2 %/K)
Ambient temperature (storage/transport)	-40 °C ... 85 °C
Ambient temperature (start-up type tested)	-25 °C
Maximum altitude	≤ 4000 m (> 2000 m, Derating: 10 %/1000 m)
Max. permissible relative humidity (operation)	≤ 95 % (at 25 °C, non-condensing)
Shock (operation)	18 ms, 30g, per spatial direction (IEC 60068-2-27)
Vibration (operation)	< 15 Hz, amplitude ±2.5 mm (IEC 60068-2-6)
	15 Hz ... 150 Hz, 2.3g, 90 min.
Temp code	T4 (-10 ... +70 °C; > 50 °C, Derating: 2 %/K)

Standards and regulations

Safety extra-low voltage

Standard designation	Safety extra-low voltage
Standards/specifications	IEC 61010-1 (SELV)

Protective extra-low voltage

Standard designation	Protective extra-low voltage
Standards/specifications	IEC 61010-2-201 (PELV)

Safe isolation

Standard designation	Safe isolation
Standards/specifications	IEC 61558-2-16

Low-voltage power supplies, DC output

Standard designation	Low-voltage power supplies, DC output
Standards/specifications	EN 61204-3

Safety requirements for electrical equipment for measurement, control, and laboratory use

Standard designation	Safety requirements for electrical equipment for measurement, control, and laboratory use
Standards/specifications	IEC 61010-1

Household and similar electrical appliances - Safety

Standard designation	Safety of electrical devices for household use and similar purposes
Standards/specifications	DIN EN 60335-1

Electric vehicle conductive charging system - Part 21-2: EMC requirements for off board electric vehicle charging systems

Standard designation	Electric vehicle conductive charging system - Part 21-2: EMC requirements for off board electric vehicle charging systems
Standards/specifications	IEC 61851-21-2
Note	Class B

Approvals

UL

Identification	UL 1310 Class 2 Power Units

UL

Identification	UL/C-UL Listed UL 61010-1

UL

Identification	UL/C-UL Listed UL 61010-2-201

UL

Identification	UL/C-UL Listed ANSI/UL 121201 Class I, Division 2, Groups A, B, C, D (Hazardous Location)

EMC data

Electromagnetic compatibility	Conformance with EMC Directive 2014/30/EU
Low Voltage Directive	Conformance with Low Voltage Directive 2014/35/EC
Interference emission	Interference emission in accordance with EN 61000-6-3 (residential and commercial) and EN 61000-6-4 (industrial)
Noise immunity	EN 61000-6-2:2005

Conducted noise emission

Standards/regulations	EN 55016
	EN 61000-6-3 (Class B)

Noise emission

Standards/regulations	EN 55016
	EN 61000-6-3 (Class B)

Harmonic currents

Standards/regulations	EN 61000-3-2
	EN 61000-3-2 (Class A)

Flicker

Standards/regulations	EN 61000-3-3
Frequency range	0 kHz ... 2 kHz

Electrostatic discharge

Standards/regulations	EN 61000-4-2

Electrostatic discharge

Contact discharge	6 kV (Test Level 3)
Discharge in air	8 kV (Test Level 3)
Comments	Criterion A

Electromagnetic HF field

Standards/regulations	EN 61000-4-3

Electromagnetic HF field

Frequency range	80 MHz ... 1 GHz
Test field strength	10 V/m (Test Level 3)
Frequency range	1 GHz ... 6 GHz
Test field strength	10 V/m (Test Level 3)
Comments	Criterion A

Fast transients (burst)

Standards/regulations	EN 61000-4-4

Fast transients (burst)

Input	asymmetrical 4 kV (Test Level 4)
Output	asymmetrical 2 kV (Test Level 3)
Comments	Criterion A

Surge voltage load (surge)

Standards/regulations	EN 61000-4-5

Surge voltage load (surge)

Input	symmetrical 2 kV (Test Level 4)
	asymmetrical 4 kV (Test Level 4)
Output	symmetrical 1 kV (Test Level 3)
	asymmetrical 2 kV (Test Level 3)

Comments	Criterion A

Conducted interference

Standards/regulations	EN 61000-4-6

Conducted interference

Input/Output	asymmetrical
Frequency range	0.15 MHz ... 80 MHz
Comments	Criterion A
Voltage	10 V (Test Level 3)

Voltage dips

Standards/regulations	EN 61000-4-11
Voltage	230 V AC
Frequency	50 Hz
Voltage dip	70 %
Number of periods	25 periods
Additional text	Class 3
Comments	Criterion A
Voltage dip	40 %
Number of periods	10 periods
Additional text	Class 3
Comments	Criterion A
Voltage dip	0 %
Number of periods	1 period
Additional text	Class 3
Comments	Criterion A

Criteria

Criterion A	Normal operating behavior within the specified limits.
Criterion B	Temporary impairment to operational behavior that is corrected by the device itself.
Criterion C	Temporary adverse effects on the operating behavior, which the device corrects automatically or which can be restored by actuating the operating elements.

Drawings

Dimensional drawing

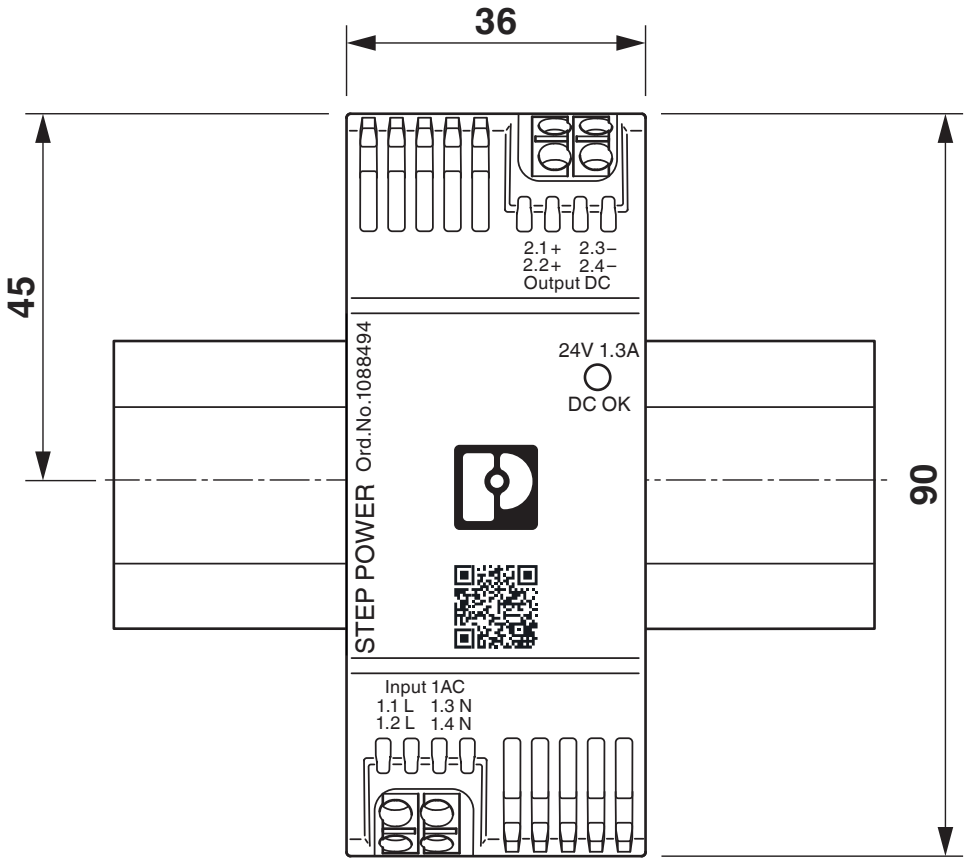

Device dimensions (dimensions in mm)

Dimensional drawing

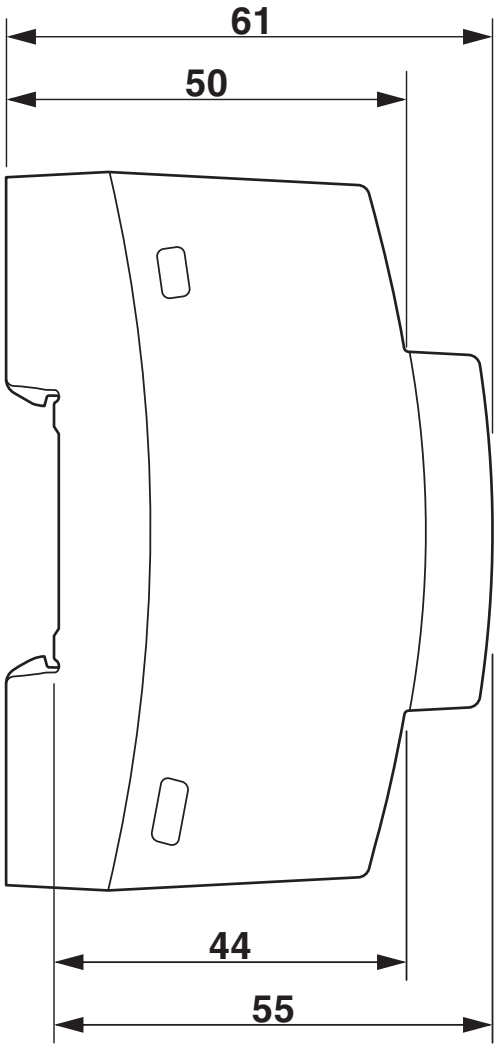

Device dimensions (dimensions in mm)

Schematic diagram

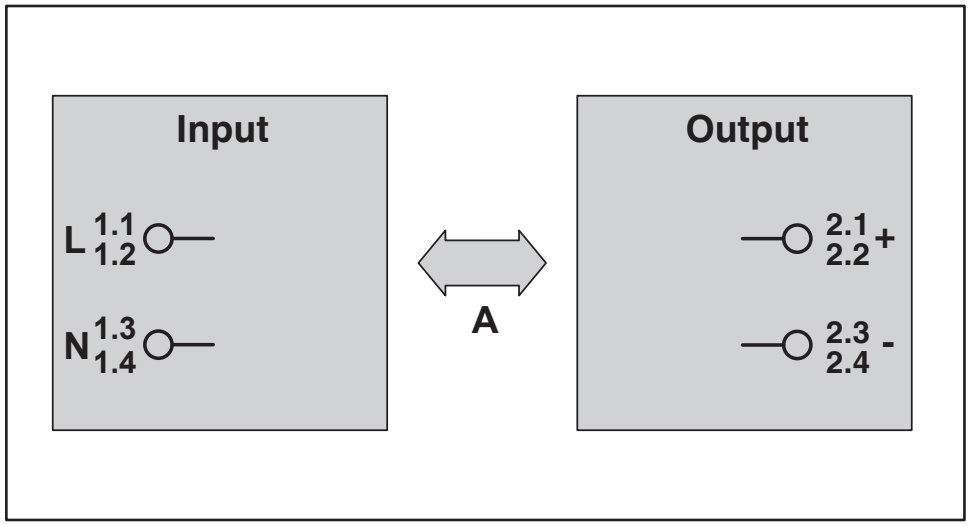

Test sections, insulation voltage

Schematic diagram

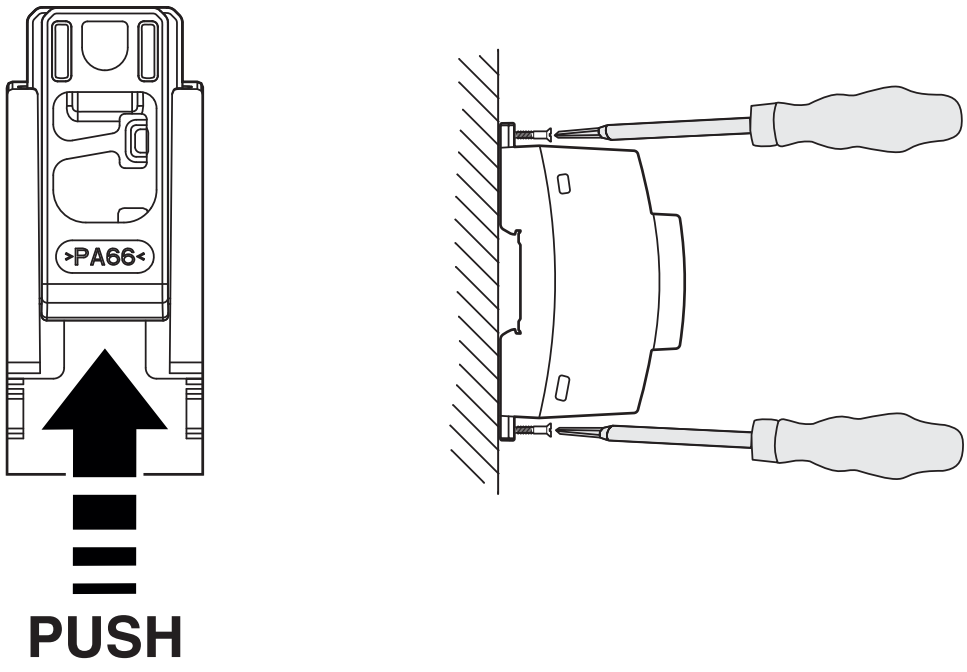

Mounting option

Diagram

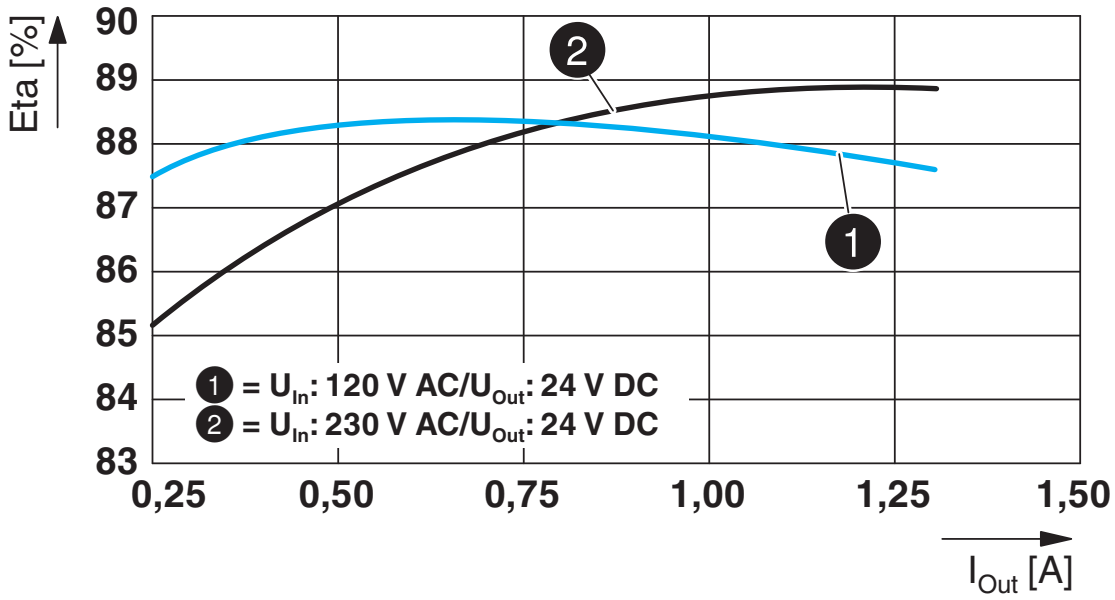

Efficiency

Diagram

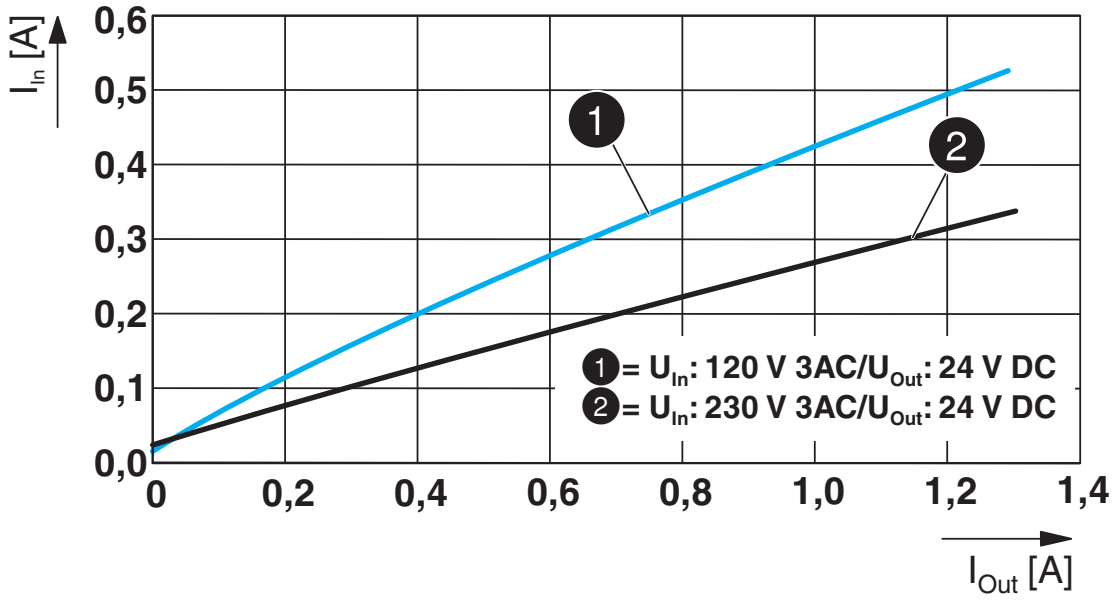

Input current/output current

Diagram

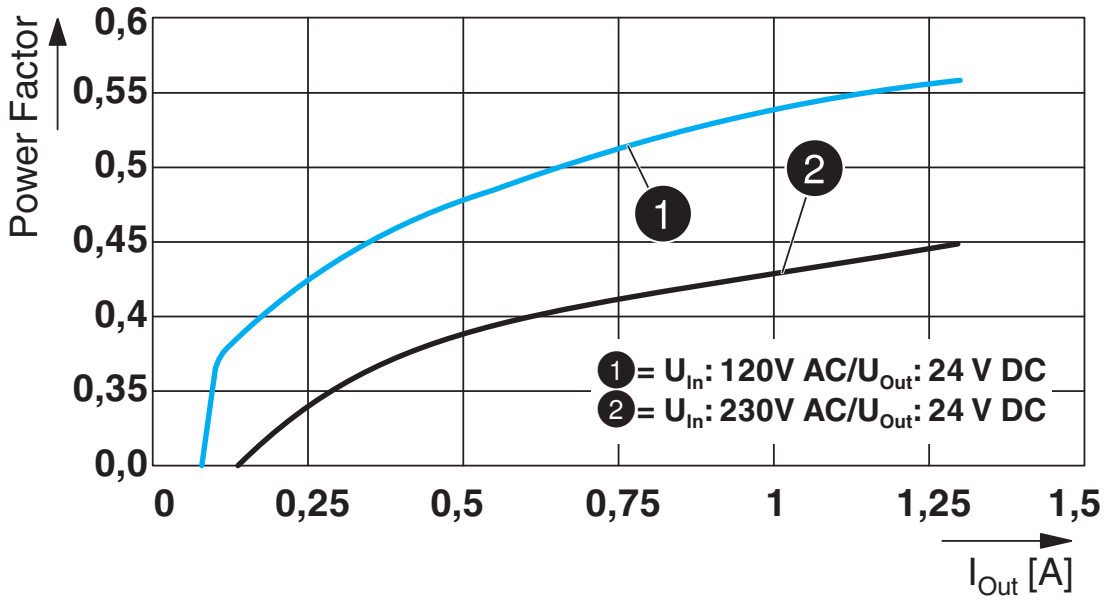

Power factor

Diagram

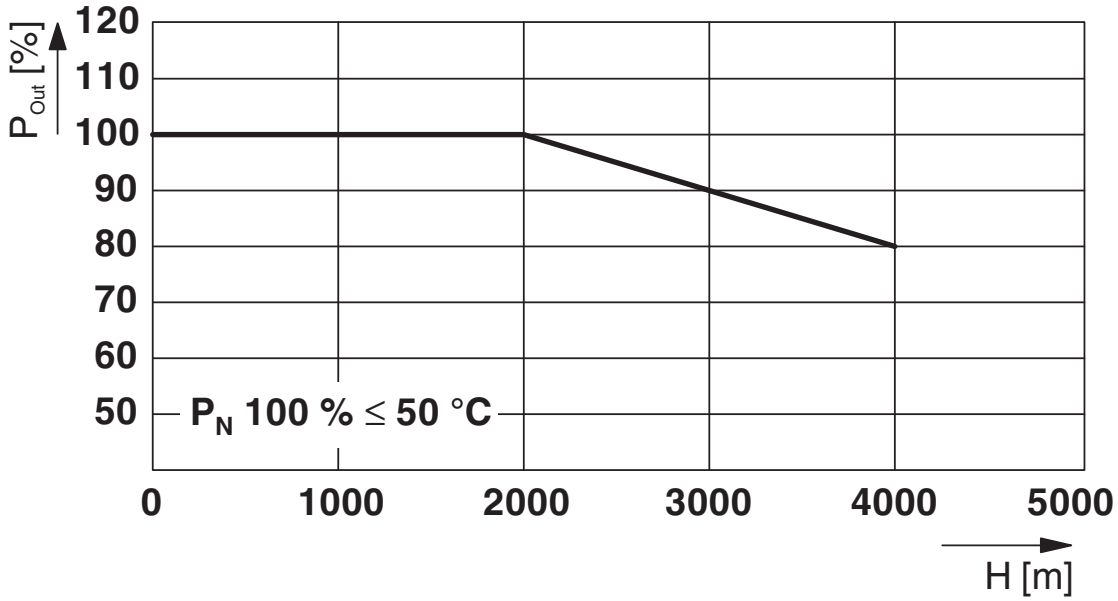

Output power/installation altitude

Block diagram

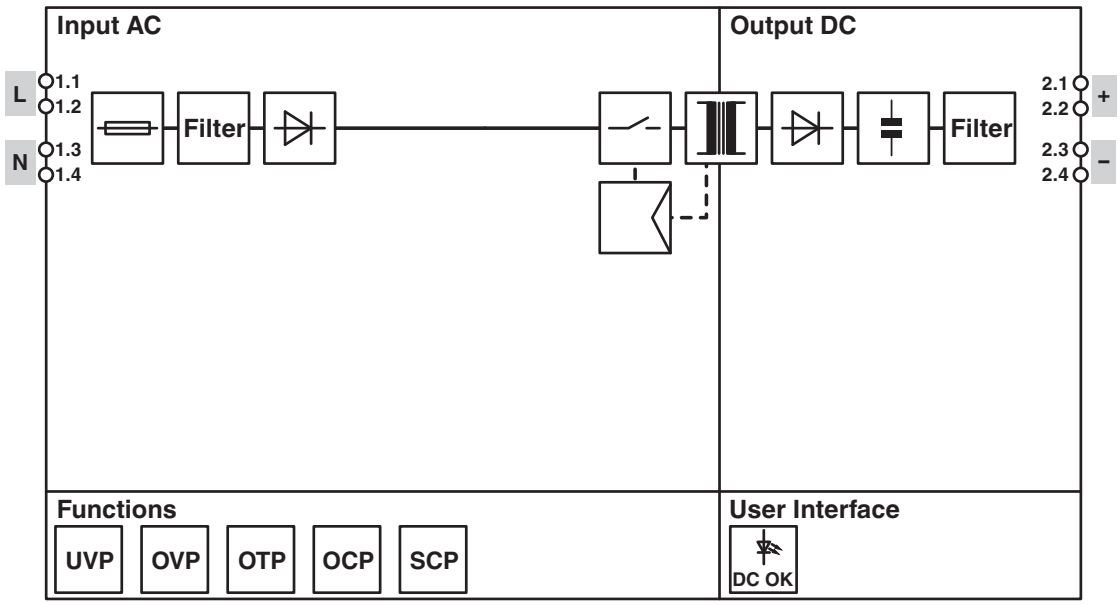

Block diagram

Approvals

To download certificates, visit the product detail page: https://www.phoenixcontact.com/gb/products/1088494

cULus Listed
Approval ID: FILE E 123528

EAC
Approval ID: RU S-DE.BL08.W.00764

EAC
Approval ID: RU S-DE.BL08.W.00764

BIS Licence Document
Approval ID: R-41259195

EAC
Approval ID: KZ7500651 0101 12535

cULus Listed
Approval ID: FILE E 199827

Classifications

ECLASS

ECLASS-13.0	27040701
ECLASS-15.0	27040701

ETIM

ETIM 10.0	EC002540

UNSPSC

UNSPSC 21.0	39121000

Environmental product compliance

EU RoHS

Fulfills EU RoHS substance requirements	Yes
Exemption	6(c), 7(c)-I

China RoHS

Environment friendly use period (EFUP)	EFUP-25
	An article-related China RoHS declaration table can be found in the download area for the respective article under "Manufacturer declaration". For all articles with EFUP-E, no China RoHS declaration table issued and required.

EU REACH SVHC

REACH candidate substance (CAS No.)	Lead(CAS: 7439-92-1)
SCIP	eab21025-5bc8-4042-a9c9-cbba4e26e873

EF3.1 Climate Change

CO2e kg	5.048 kg CO2e

Phoenix Contact 2026 © - all rights reserved
https://www.phoenixcontact.com

PHOENIX CONTACT Ltd
Halesfield 13, Telford
Shropshire, TF7 4PG
01952 681700
info@phoenixcontact.co.uk