AXL P EX IS DO4 SD 21-60 1F - Digital module

1087078

https://www.phoenixcontact.com/gb/products/1087078

Please be informed that the data shown in this PDF document is generated from our online catalog. Please find the complete data in the user documentation. Our general terms of use for downloads are valid.



Axioline P, Digital output module, Digital outputs: 4, 21 V, 60 mA, connection technology: 2-conductor, Solenoid drive, intrinsically safe, transmission speed in the local bus: 100 Mbps, degree of protection: IP20, including bus base module and connectors

Product description

The module is an Axioline P I/O module for use in the Axioline P modular I/O system. The module is a modular I/O device that can be affixed to the Axioline P local bus, to communicate I/O data up to the Axioline P bus coupler, which forms the head of the station. As an intrinsic safety I/O module, this device allows direct connection from intrinsically safe field I/Os to the terminals of the module. The module is fully hot-swappable and may be removed while under power. The module digital output characteristics of 21 V DC and 60 mA allow the connection of up to four solenoid driven, digital output signals.

Your advantages

- Four 21 V DC - 60 mA digital output-powered control signals for solenoid drives
- Intrinsically safe digital outputs with connection to Zone 1, Zone 0 or Division 1
- Temperature range: -40 °C ... +70 °C
- Hot-swappable

ELEKTROGERÄTE RÜCKNAHME

Commercial data

Item number	1087078
Packing unit	5 pc
Minimum order quantity	5 pc
Sales key	DRIP32
Product key	DRIP32
GTIN	4055626882062
Weight per piece (including packing)	392.5 g

Weight per piece (excluding packing)	263.5 g
Customs tariff number	85389099
Country of origin	US

Technical data

Dimensions

Dimensional drawing	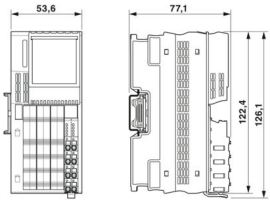
Width	53.6 mm
Height	126.1 mm
Depth	77.14 mm
Note on dimensions	The depth applies when a TH 35-7.5 DIN rail is used (in accordance with EN 60715).

Notes

Note on application

Note on application	Only for industrial use

Utilization restriction

CCCex note	Use in potentially explosive areas is not permitted in China.

Mounting

Mounting type	DIN rail mounting
Mounting position	any (no temperature derating)

Material specifications

Color (Housing)	gray (RAL 7042)

Interfaces

Axioline P local bus

Number of interfaces	2
Connection method	Bus base module
Transmission speed	100 Mbps

System properties

Programming data

Input address area	0 Byte
Output address area	1 Byte

Output data

Digital:

Output name	Digital outputs
Connection method	Push-in connection
Connection technology	2-conductor
Number of outputs	4
Protective circuit	Polarity reversal protection of the outputs
Output voltage	21 V
Output current	60 mA (Per channel)
Maximum output current per channel	60 mA
Nominal output voltage	21 V

Product properties

Product type	I/O component
Product family	Axioline P
Type	block modular
Mounting position	any (no temperature derating)
Scope of supply	including bus base module and connectors
Special properties	Solenoid drive
	intrinsically safe

Insulation characteristics

Overvoltage category	II (IEC 60664-1, EN 60664-1)
Pollution degree	2 (IEC 60664-1, EN 60664-1)

Electrical properties

Maximum power dissipation for nominal condition	6.32 W

Potentials: Supply voltage (U_L)

Supply voltage	24 V DC (via bus base module)
Supply voltage range	19.2 V DC ... 30 V DC
Current draw	max. 455 mA (via bus base module)
	typ. 322 mA (via bus base module)
Protective circuit	Surge protection; electronic (35 V, 0.5 s)
	Reverse polarity protection; Polarity protection diode
	Transient protection; Suppressor diode

Potentials: Axioline P local bus supply (U_{Bus})

Supply voltage	5 V DC (via bus base module)
Current draw	max. 135 mA
	typ. 110 mA

Electrical isolation/isolation of the voltage ranges

Test voltage: 5 V supply of the local bus (U_{Bus}) / functional ground	500 V AC, 60 Hz, 1 min
Test voltage: 5 V supply of the local bus (U_{Bus}) / analog inputs	1500 V AC, 60 Hz, 1 min
Test voltage: 24 V supply (I/O) / functional ground	500 V AC, 60 Hz, 1 min
Test voltage: 24 V supply (I/O) / analog inputs	1500 V AC, 60 Hz, 1 min

Test voltage: Analog inputs / functional ground	500 V AC, 60 Hz, 1 min

Connection data

Connection technology

Connection name	Axioline P connector
Note on the connection method	Please observe the information provided on conductor cross-sections in the “Axioline P: System and installation” user manual.

Axioline P connector

Connection method	Push-in connection
Note on the connection method	Please observe the information provided on conductor cross-sections in the “Axioline P: System and installation” user manual.
Conductor cross-section, rigid	0.2 mm² ... 1.5 mm²
Conductor cross-section, flexible	0.2 mm² ... 1.5 mm²
Conductor cross-section AWG	24 ... 16
Stripping length	8 mm

Environmental and real-life conditions

Ambient conditions

Ambient temperature (operation)	-40 °C ... 70 °C
Degree of protection	IP20
Air pressure (operation)	70 kPa ... 106 kPa (up to 2000 m above sea level)
Air pressure (storage/transport)	70 kPa ... 106 kPa (up to 2000 m above sea level)
Ambient temperature (storage/transport)	-40 °C ... 85 °C
Permissible humidity (operation)	5 % ... 95 % (non-condensing)
Permissible humidity (storage/transport)	5 % ... 95 % (non-condensing)

Mechanical test

Vibration resistance in accordance with EN 60068-2-6/IEC 60068-2-6	5g
Shock in accordance with EN 60068-2-27/IEC 60068-2-27	30g
Continuous shock in accordance with EN 60068-2-27/IEC 60068-2-27	10g

Standards and regulations

Protection class	III (IEC 61140, EN 61140, VDE 0140-1)

Approvals

ATEX

Identification	II 3(1) G Ex ec [ia IIB Ga] IIC T4 Gc II (1) D [Ex ia Da] IIIC
Certificate	DEMKO 20 ATEX 2370X

IECEx

Identification	Ex ec [ia IIB Ga] IIC T4 Gc [Ex ia Da] IIIC

Certificate	IECEx UL 20.0044X

UKCA Ex (UKEX)

Identification	II 3(1) G Ex ec [ia IIB Ga] IIC T4 Gc II (1) D [Ex ia Da] IIIC
Certificate	UL22UKEX2508X

UL, USA/Canada

Identification	cULus
Certificate	E238705

UL Ex, USA / Canada

Identification	Class I, Division 2, Groups A, B, C, D, T4
	Intrinsically safe connections to: Class I, Groups A, B, C, D; Class II, Groups E, F, G; Class III; [Ex ia] Haz loc
	Class I, Zone 2, AEx ec [ia IIB Ga] IIC T4 Gc
	[AEx ia Da] IIIC
	Ex ec [ia IIB Ga] IIC T4 Gc
	[Ex ia Da] IIIC
Certificate	E196811

CCC / China-Ex

Identification	Ex ec [ia IIB Ga] IIC T4 Gc
	[Ex ia Da] IIIC

Ex data

UL, USA / Canada	Ind. Cont. Eq. (E238705) also Listed Ind. Cont. Eq. for haz. loc. E196811 Install in: Class I, Div. 2, Groups A, B, C, D T4 Intrinsically safe outputs for: Class I, Groups C, D; Class II, Groups E, F, G; Class III; [Ex ia] Haz loc Class I, Zone 2, AEx ec [ia IIB Ga] IIC T4 Gc [AEx ia Da] IIIC Ex ec [ia IIB Ga] IIC T4 Gc [Ex ia Da] IIIC

Ex data

Safety data

Max. output voltage U_o	24.8 V
Max. output current I_o	180 mA
Max. output power P_o	1116 mW
Safety-related maximum voltage U_m	250 V
C/IIB, IIIC: Max. external inductivity L_o / Max. external capacitance C_o	2.779 mH / 0.86 µF
D/IIA, E, F, G, Class III: Max. external inductivity L_o / Max. external capacitance C_o	7.168 mH / 3.05 µF

Drawings

Dimensional drawing

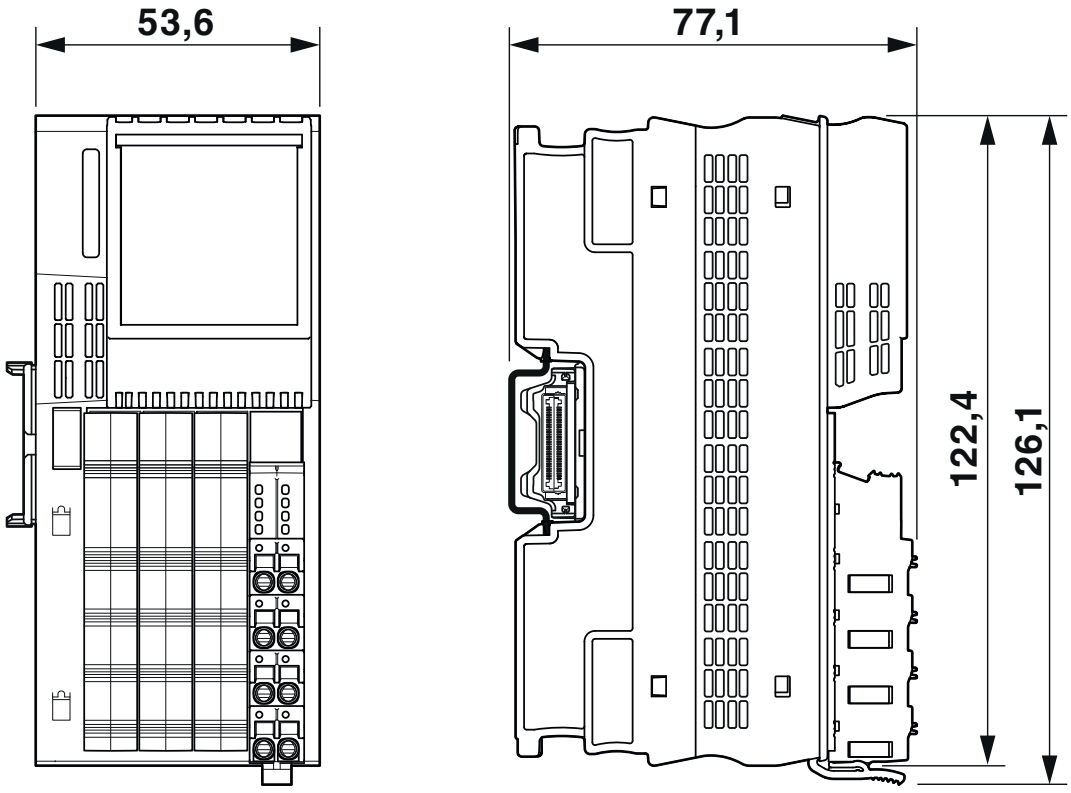

Schematic diagram

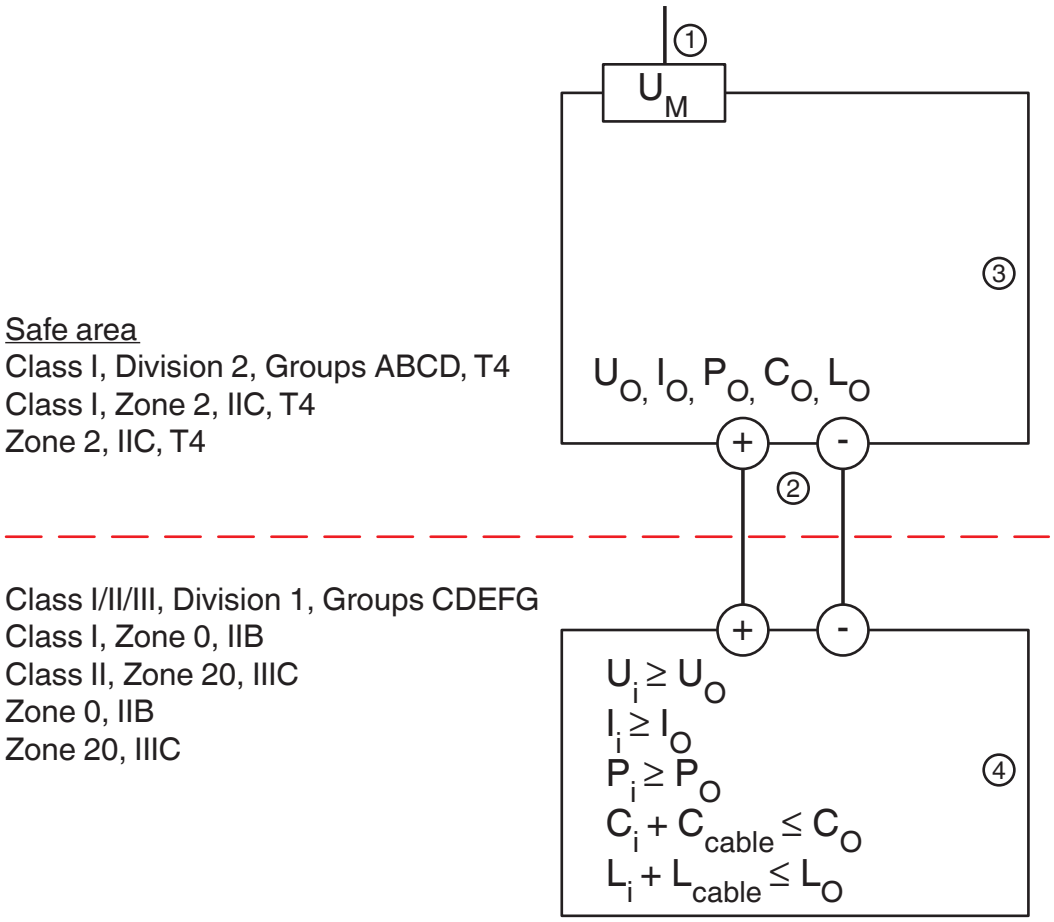

Approvals

To download certificates, visit the product detail page: https://www.phoenixcontact.com/gb/products/1087078

cULus Listed
Approval ID: E238705

IECEx
Approval ID: IECEx UL 20.0044X

cUL Listed
Approval ID: FILE E196811

UL Listed
Approval ID: FIILE E196811

ATEX
Approval ID: DEMKO 20 ATEX 2370X

CCC
Approval ID: 2025122316122298

UKCA-EX
Approval ID: UL22UKEX2508X

Classifications

ECLASS

ECLASS-13.0	27242604
ECLASS-15.0	27242604

ETIM

ETIM 10.0	EC001599

UNSPSC

UNSPSC 21.0	32151600

Environmental product compliance

EU RoHS

Fulfills EU RoHS substance requirements	Yes
Exemption	7(a), 7(c)-I

China RoHS

Environment friendly use period (EFUP)	EFUP-25
	An article-related China RoHS declaration table can be found in the download area for the respective article under "Manufacturer declaration". For all articles with EFUP-E, no China RoHS declaration table issued and required.

EU REACH SVHC

REACH candidate substance (CAS No.)	Lead(CAS: 7439-92-1)
SCIP	23ffcfe7-6722-4e05-806f-4c21f0998c7e

Phoenix Contact 2026 © - all rights reserved
https://www.phoenixcontact.com

PHOENIX CONTACT Ltd
Halesfield 13, Telford
Shropshire, TF7 4PG
01952 681700
info@phoenixcontact.co.uk