QUINT4-CAP/24DC/20/16KJ/EIP - DC UPS with integrated capacity

1076861

https://www.phoenixcontact.com/gb/products/1076861

Please be informed that the data shown in this PDF document is generated from our online catalog. Please find the complete data in the user documentation. Our general terms of use for downloads are valid.

CRA-READY



QUINT DC UPS with integrated capacitor, with maintenance-free energy storage based on double-layer capacitor, EtherNet/IP (Modbus/TCP), DIN rail mounting, input: 24 V DC, output: 24 V DC / 20 A / 16 kJ incl. mounted UTA 107 universal DIN rail adapter. The product is being prepared for compliance with the Cyber Resilience Act (CRA).

Product description

The QUINT CAP modules with integrated interface can be easily integrated into industrial networks. The DC UPS with integrated capacity prevents cyclic failures of up to several minutes and combines an electronic switchover unit and energy storage device in one housing.

Your advantages

- Easy integration into industrial networks with freely selectable interface: USB/Modbus/RTU, PROFINET, EtherNet/IP™/Modbus/TCP, EtherCAT®
- Long service life with maintenance-free double-layer capacitors
- Reliable startup of difficult loads with static boost
- Comprehensive signaling: Preventive function monitoring reports critical operating states
- Extension of the buffer time with parallel connection of up to four devices

ELEKTROGERÄTE RÜCKNAHME

Commercial data

Item number	1076861

Packing unit	1 pc
Minimum order quantity	1 pc
Sales key	CMUIC3
Product key	CMUIC3
GTIN	4055626785486
Weight per piece (including packing)	3,451.8 g
Weight per piece (excluding packing)	2,856 g
Customs tariff number	85322900
Country of origin	CN

Technical data

Notes

Note on application

Note on application	As things stand now, we are preparing the product so that, as of December 11, 2027, it will comply with the requirements of the EU Cyber Resilience Act (CRA) based on the information currently available regarding the CRA.

Input data

DC operation

Input voltage	24 V DC (SELV)
Input voltage range	22.5 V DC ... 30 V DC
Fixed backup threshold	< 22 V DC
	> 30 V DC
Current consumption I_N (U_N, I_{OUT} = I_N, I_{charge} = 0)	20 A
Current consumption I_{max} (U_N, I_{OUT} = $I_{Stat.Boost}$, I_{Charge} = max)	30 A
Current consumption $I_{No-Load}$(U_N, I_{OUT} = 0, I_{charge} = 0)	0.1 A (No-load)
Current consumption I_{charge} (U_N, I_{OUT} = 0, I_{charge} = max)	10 A (charging process)
Power consumption P_{max} (U_N, I_{OUT} = $I_{Stat.Boost}$, I_{charge} = max)	599 W
Power consumption P_N (U_N, I_{OUT} = I_N, I_{charge} = 0)	488 W
Power consumption P_{charge} (U_N, I_{OUT} = 0, I_{charge} = max)	244 W
Buffer time	4 min (2.5 A)
	30 s (20 A)
Charging time	approx. 6.3 min (2.5 A)
	approx. 2.1 min (10 A)
Recharging time	approx. 5.4 min (2.5 A)
	approx. 1.4 min (10 A)
Inrush current	≤ 7 A (≤ 4 ms)
Switch-on time	1 ms (buffer mode)
Internal input fuse	no
Dielectric strength	max. 35 V DC (Reverse polarity protection)
Voltage drop, input/output	0.5 V DC

Output data

Efficiency	> 98 % (with charged energy storage device)
Connection in parallel	yes
	max. 4
Connection in series	no

Mains operation

Output voltage	24 V DC

Output current I_N	20 A
Static Boost ($I_{Stat.Boost}$)	25 A
Output power P_{OUT} (U_N, I_{OUT} = I_N)	480 W
Output power P_{OUT} (U_N, I_{OUT} = $I_{stat.Boost}$)	600 W
Power dissipation No load (U_N, I_{Out} = 0, I_{Charge} = 0)	5 W
Power dissipation Nominal load (U_N, I_{Out} = I_N, I_{Charge} = 0)	10 W
Short-circuit-proof	yes (with input fuse)
Idling-proof	yes

Battery operation

Output voltage	24 V DC
Output current I_N	20 A
Static Boost ($I_{Stat.Boost}$)	25 A
Output power P_{OUT} (U_N, I_{OUT} = I_N)	480 W
Output power P_{OUT} (U_N, I_{OUT} = $I_{stat.Boost}$)	600 W
Power dissipation No load (U_N, I_{Out} = 0, I_{Charge} = 0)	5 W
Power dissipation Nominal load (U_N, I_{Out} = I_N, I_{Charge} = 0)	90 W
Short-circuit-proof	yes
Idling-proof	yes

Energy storage

General

Capacity	16 kJ
Storage medium	Double-layer capacitor
Buffer time	4 min (2.5 A)
	30 s (20 A)

Connection data

Input

Position	1.x

Connection technology

Position marking	1.1 (+), 1.2 (+), 1.3 (-), 1.4 (-)

Conductor connection

Connection method	Screw connection
rigid	0.2 mm² ... 6 mm²
flexible	0.2 mm² ... 4 mm²
flexible with ferrule without plastic sleeve	0.25 mm² ... 4 mm²
flexible with ferrule with plastic sleeve	0.25 mm² ... 4 mm²
rigid (AWG)	24 ... 10
Stripping length	8 mm
Tightening torque (EU)	0.5 Nm ... 0.6 Nm

Drive form screw head	Slotted L

2-conductor connection

rigid	0.2 mm² ... 1.5 mm²
flexible	0.2 mm² ... 1.5 mm²
flexible with TWIN ferrule with plastic sleeve	0.5 mm² ... 2.5 mm²

Output

Position	2.x

Connection technology

Position marking	2.1 (+), 2.2 (-)

Conductor connection

Connection method	Screw connection
rigid	0.2 mm² ... 6 mm²
flexible	0.2 mm² ... 4 mm²
flexible with ferrule without plastic sleeve	0.25 mm² ... 4 mm²
flexible with ferrule with plastic sleeve	0.25 mm² ... 4 mm²
rigid (AWG)	24 ... 10
Stripping length	8 mm
Tightening torque (EU)	0.5 Nm ... 0.6 Nm
Drive form screw head	Slotted L

2-conductor connection

rigid	0.2 mm² ... 1.5 mm²
flexible	0.2 mm² ... 1.5 mm²
flexible with TWIN ferrule with plastic sleeve	0.5 mm² ... 2.5 mm²

Signal

Position	3.x

Connection technology

Position marking	3.1 (13), 3.2 (14), 3.3 (Alarm), 3.4 (Ready), 3.5 (Remote), 3.6 (Parallel Port), 3.7 (SGnd)

Conductor connection

Connection method	Push-in connection
rigid	0.2 mm² ... 1 mm²
flexible	0.2 mm² ... 1.5 mm²
flexible with ferrule without plastic sleeve	0.2 mm² ... 1 mm²
flexible with ferrule with plastic sleeve	0.2 mm² ... 0.75 mm²
rigid (AWG)	24 ... 18
Stripping length	8 mm

Interfaces

Interface	EtherNet/IP (Modbus/TCP)

Number of interfaces	2
Connection method	RJ45
Position	5.x
Supported protocols	EtherNet/IP (Explicit Messaging, Implicit Messaging)
	BootP (Bootstrap Protocol)
	DHCP (Dynamic Host Configuration Protocol)
	DLR (Device Level Ring)
	Modbus/TCP
Locking	Locking clip
Transmission physics	Twisted-Pair
Features	Autonegotiation
	Autocrossing
	Autopolarity
	Half- or full-duplex
Topology	Star
	Line
	Ring
Transmission speed	10 Mbps ... 100 Mbps
Transmission length	max. 100 m
Cycle time	30 ms (Default)
Access time	≤ 2 s
Chipset	Renesas R-IN32M3
Electrical isolation	yes

Signaling

Signal state Remote

Connection labeling	3.5
Channel	DI (digital input)
State (configurable)	Remote
State condition	Remote
Low signal	Connection to SGnd with < 3 kΩ
High signal	Open
Signal - state assignment	low - active
Reference potential	3.7 (SGnd, identical to1.3, 1.4, 2.2)

Signal state Parallel port

Connection labeling	3.6
Channel	DI / DO (digital input / digital output)
Switching input description	Connection terminal block communication, parallel operation
State (configurable)	Parallel Mode

State condition (configurable)	Not active: none Active: Output: buffer mode <1 V Output: mains operation 24 V (U_N-1 V (typical)) Input: Connected with SGnd: start buffer mode
Switching voltage	< 1 V
	24 V (U_N - 1 V (typical))
Current carrying capacity	4 mA
Reference potential	Different device, parallel port IN/OUT

Signal state Alarm

Connection labeling	3.3
Channel	DO (digital output)
Switching output	Transistor
State (configurable)	Group alarm
State condition (configurable)	Alarm threshold
Output voltage	26 V (U_N - 1 V (typical))
Output can be loaded	max. 20 mA
State - signal assignment	active - low
Reference potential	3.7 (SGnd, identical to1.3, 1.4, 2.2)
LED status indicator	red (Alarm)

Signal state UIN OK

Connection labeling	3.1, 3.2
Channel	DO (digital output)
Switching output	Electronic relays (OptoMOS)
State (configurable)	U_{In} OK
State condition (configurable)	U_{In} > 22,5 V DC, U_{In} < 30 V DC
Output voltage	max. 30 V
Output can be loaded	300 mA
State - signal assignment	active - high
LED status indicator	green (U_{In} OK)

Signal state Ready

Connection labeling	3.4
Channel	DO (digital output)
Switching output	Transistor
State (configurable)	Ready
State condition (configurable)	State of charge = 100% or buffer mode
Output voltage	26 V (U_N - 1 V (typical))
Output can be loaded	max. 20 mA
State - signal assignment	active - high
Reference potential	3.7 (SGnd, identical to1.3, 1.4, 2.2)
LED status indicator	Green (state of charge - SOC)

Signal ground SGnd

Connection labeling	3.7
Switching voltage	0 V
Current carrying capacity	max. 60 mA
Function	Signal ground
Reference potential	3.3 Alarm, 3.4 Ready, 3.5 Remote

Electrical properties

Insulation voltage input, output / housing	500 V

Product properties

Product type	DC UPS with integrated capacitor
Product family	QUINT DC UPS with integrated capacitor
MTBF (IEC 61709, SN 29500)	1351036 h (25 °C)
	903325 h (40 °C)
	470143 h (60 °C)
Special properties	The product is being prepared for compliance with the Cyber Resilience Act (CRA)

Insulation characteristics

Protection class	III (Special application (SELV))
Overvoltage category (UL 60950-1)	II (≤ 4000 m)
Overvoltage category (EN 61010-1)	II (≤ 4000 m)
Overvoltage category (EN 61010-2-201)	II (≤ 4000 m)
Degree of pollution	2

Dimensions

Item dimensions

Width	244 mm
Height	130 mm
Depth	125 mm

Installation dimensions

Installation distance right/left	0 mm / 0 mm
Installation distance top/bottom	50 mm / 50 mm

Mounting

Mounting type	DIN rail mounting
Mounting position	horizontal DIN rail NS 35, EN 60715

Material specifications

Flammability rating according to UL 94 (housing / terminal blocks)	V0
Housing material	Metal

Environmental and real-life conditions

Ambient conditions

Degree of protection	IP20
Ambient temperature (operation)	-25 °C ... 60 °C (> 40 °C Derating: 1 %/K)
Ambient temperature (storage/transport)	-40 °C ... 60 °C
Ambient temperature (start-up type tested)	-40 °C
Maximum altitude	≤ 4000 m
Climatic class	3K3 (in acc. with EN 60721)
Max. permissible relative humidity (operation)	≤ 95 %
Shock	30g, 18 ms per spatial direction (in accordance with IEC 60068-2-27)
Vibration (operation)	0,7g

Standards and regulations

Protective extra-low voltage

Standard designation	Protective extra-low voltage
Standards/specifications	IEC 61010-1 (SELV)
	IEC 61010-2-201 (PELV)

Approvals

UL

Identification	UL 61010-1

UL

Identification	UL 61010-2-201

UL

Identification	UL ANSI/ISA-12.12.01 Class I, Division 2, Groups A, B, C, D (Hazardous Location)

UL

Identification	UL 121201

UL

Identification	CAN/CSA-C22.2 No. 61010-1-12

UL

Identification	CAN/CSA C22.2 No. 61010-2-201:14

UL

Identification	CSA C22.2 No. 213-17 Class I, Devsion 2, Groups A, B, C, D (Hazardous Location)

CB scheme

	IEC 61010-1

Identification	IEC 61010-2-201
	EN 61010-1
	EN 61010-2-201

EMC data

Electromagnetic compatibility	Conformance with EMC Directive 2014/30/EU
Interference emission	Noise emission in accordance with EN 61000-6-3 and EN 61000-6-4
Noise immunity	Device immunity in accordance with EN 61000-6-2

Electrostatic discharge

Standards/regulations	EN 61000-4-2

Electrostatic discharge

Contact discharge	4 kV (Test Level 2)
Discharge in air	8 kV (Test Level 3)
Comments	Criterion B

Electromagnetic HF field

Standards/regulations	EN 61000-4-3

Electromagnetic HF field

Frequency range	80 MHz ... 1 GHz
Test field strength	10 V/m
Comments	Criterion A

Fast transients (burst)

Standards/regulations	EN 61000-4-4

Fast transients (burst)

Input	2 kV (Test Level 3 - asymmetrical)
Output	2 kV (Test Level 3 - asymmetrical)
Signal	2 kV (Test Level 3 - asymmetrical)
Comments	Criterion B

Surge voltage load (surge)

Standards/regulations	EN 61000-4-5

Surge voltage load (surge)

Input/Output	1 kV (Test Level 2 - symmetrical)
	2 kV (Test Level 3 - asymmetrical)
Signal	1 kV (Test Level 2 - asymmetrical)
Comments	Criterion B
Input/Output	1 kV (Test Level 2 - symmetrical)
	2 kV (Test Level 3 - asymmetrical)

Conducted interference

Standards/regulations	EN 61000-4-6

Conducted interference

Frequency range	0.15 MHz ... 80 MHz
Comments	Criterion A
Voltage	10 V

Criteria

Criterion A	Normal operating behavior within the specified limits.
Criterion B	Temporary impairment to operational behavior that is corrected by the device itself.

Drawings

Dimensional drawing

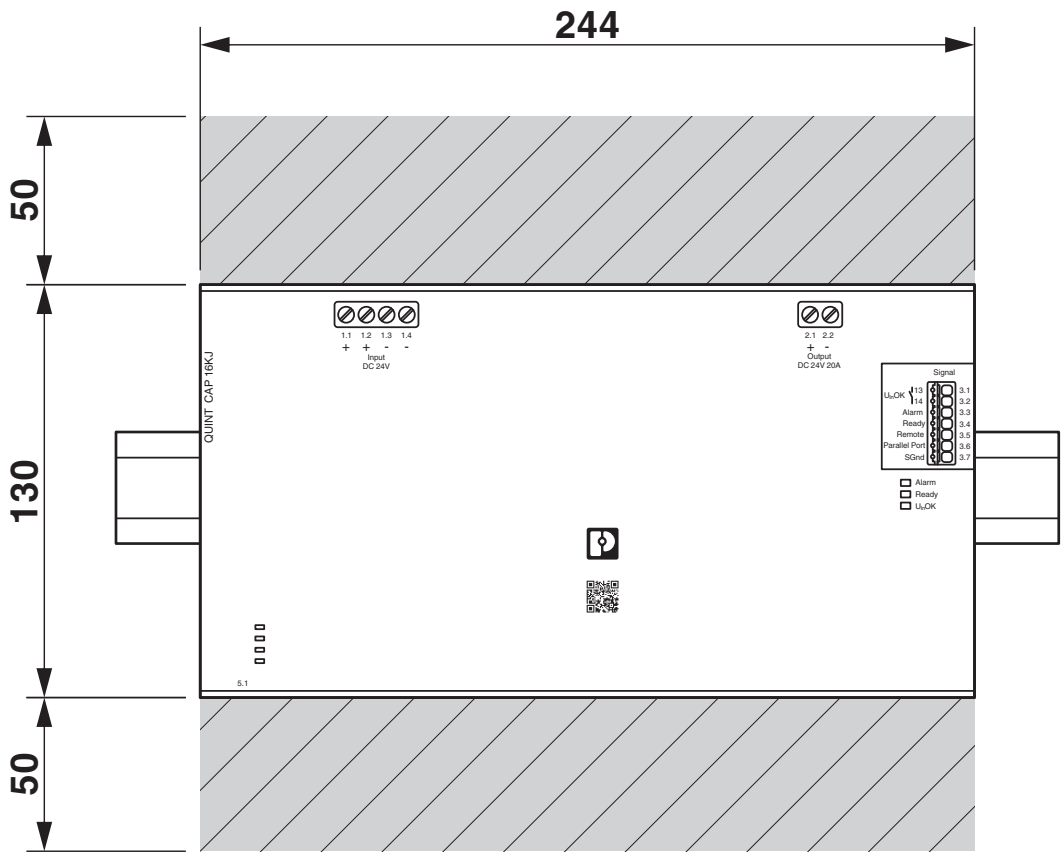

Device dimensions (dimensions in mm)

Dimensional drawing

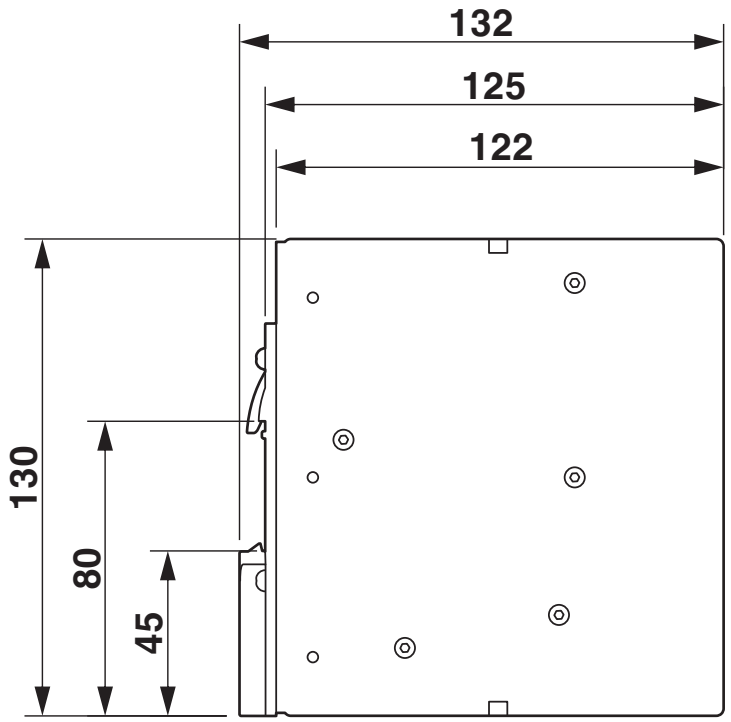

Device dimensions (dimensions in mm)

Diagram

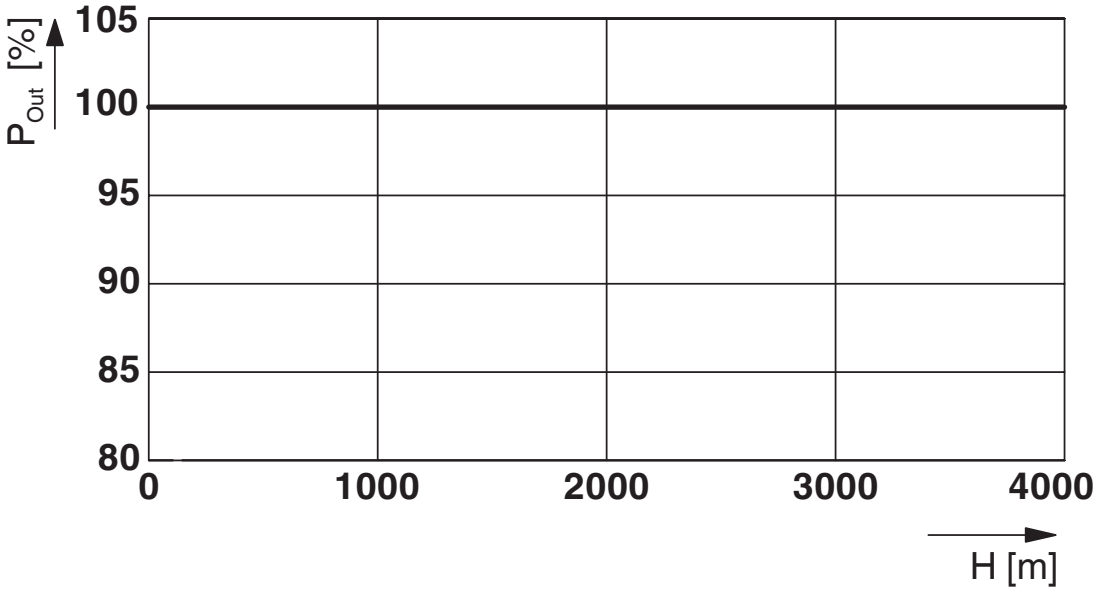

Output power/installation altitude

Block diagram

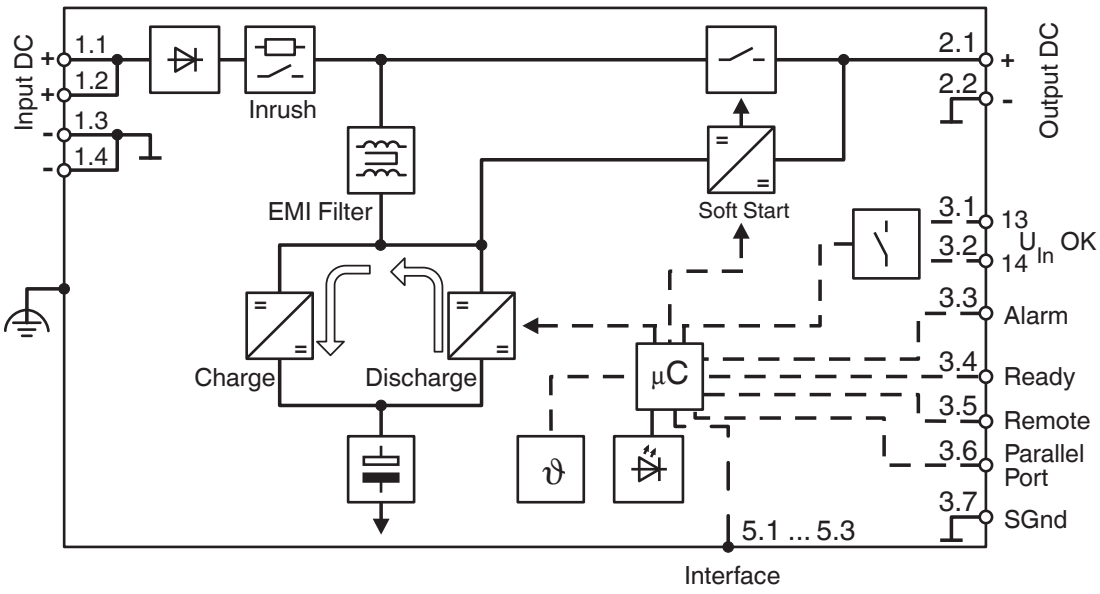

Block diagram

Graphic

Load Current	Buffertime																
	Seconds							Minutes									
	9	10	15	20	30	40	50	1	2	3	5	10	20	30	40	50	60
0.05 A																	
0.50 A																	
1.00 A																	
2.00 A																	
2.50 A																	
3.80 A																	
5.00 A																	
6.25 A																	
7.50 A																	
10.0 A																	
12.5 A																	
15.0 A																	
20.0 A																	
25.0 A																	

The data is based on an ambient temperature of +25 °C.

2320526 QUINT4-CAP/24DC/3.8/1KJ/PT

2320571 QUINT4-CAP/24DC/10/8KJ/PT

2320539 QUINT4-CAP/24DC/5/4KJ/PT

QUINT4-CAP/24DC/20/16KJ/...

QUINT CAP buffer times

Approvals

To download certificates, visit the product detail page: https://www.phoenixcontact.com/gb/products/1076861

EAC
Approval ID: D-DE.GB09.V.00570/20

EAC
Approval ID: RU*DE*HB54.B05799/20

IECEE CB Scheme
Approval ID: DK-89905-A1-UL

IECEE CB Scheme
Approval ID: DE/PTZ/0074

cULus Listed
Approval ID: 20191104-E123528

cUL Listed
Approval ID: E199827

UL Listed
Approval ID: E199827

Classifications

ECLASS

ECLASS-13.0	27040705
ECLASS-15.0	27040705

ETIM

ETIM 10.0	EC000382

UNSPSC

UNSPSC 21.0	26111700

Environmental product compliance

EU RoHS

Fulfills EU RoHS substance requirements	Yes
Exemption	6(c), 7(a), 7(c)-I

China RoHS

Environment friendly use period (EFUP)	EFUP-25
	An article-related China RoHS declaration table can be found in the download area for the respective article under "Manufacturer declaration". For all articles with EFUP-E, no China RoHS declaration table issued and required.

EU REACH SVHC

REACH candidate substance (CAS No.)	Diboron trioxide(CAS: 1303-86-2)
	Lead monoxide (lead oxide)(CAS: 1317-36-8)
	Lead(CAS: 7439-92-1)
SCIP	901729e9-50bc-4bb6-8f9e-3b1669fcd92c

Phoenix Contact 2026 © - all rights reserved
https://www.phoenixcontact.com

PHOENIX CONTACT Ltd
Halesfield 13, Telford
Shropshire, TF7 4PG
01952 681700
info@phoenixcontact.co.uk