TRIO-PS-2G/1500DC/24DC/8 - DC/DC converter

1075240

https://www.phoenixcontact.com/gb/products/1075240

Please be informed that the data shown in this PDF document is generated from our online catalog. Please find the complete data in the user documentation. Our general terms of use for downloads are valid.



Primary-switched TRIO POWER DC/DC converter with Push-in connection for DIN rail mounting, input: 1,500 V DC, output: 24 V DC / 8 A

Product description

The DC/DC converters in the TRIO POWER family supply your system directly from the field and provide a reliable power supply even without a central grid. They are particularly well-suited for photovoltaic applications, where they also allow the central inverter to be started without a supplying grid.

Your advantages

- Suitable for use in all photovoltaic systems with high input voltage due to conformity with standards UL 62109 and UL 1741
- High system availability with a robust design that ensures partial discharge resistance
- Direct, immediate supply from the solar field to supply the string monitoring function within string combiner boxes
- Quick and easy installation with Push-in connection

Commercial data

Item number	1075240
Packing unit	1 pc
Minimum order quantity	1 pc
Sales key	CMDO43
Product key	CMDO43
GTIN	4055626779492
Weight per piece (including packing)	1,546 g
Weight per piece (excluding packing)	1,537 g
Customs tariff number	85044095
Country of origin	CN

Technical data

Input data

DC operation

Nominal input voltage range	600 V DC ... 1500 V DC
Input voltage range	600 V DC ... 1500 V DC -15 % ... +10 %
Wide-range input	no
Input voltage range DC	600 V DC ... 1500 V DC -15 % ... +10 %
Electric strength, max.	≤ 1800 V DC 1 s
Typical national grid voltage	1500 V DC
	600 V DC
Voltage type of supply voltage	DC
Inrush current integral (I^2t)	typ. 0.15 A^2s
Current consumption	typ. 0.35 A (600 V DC)
	typ. 0.145 A (1500 V DC)
Recommended breaker for input protection	1 A (gPV)
Recommended fuse for input protection	1500 V DC

Output data

Efficiency	typ. 91.5 % (600 V DC)
	typ. 90.9 % (900 V DC)
	typ. 89 % (1500 V DC)
Nominal output voltage	24 V DC ±1 %
Setting range of the output voltage (U_{Set})	24 V DC ... 28 V DC (> 24 V DC, constant capacity restricted)
Nominal output current (I_N)	8 A
Derating	> 60 °C ... 70 °C (2.5 %/K)
Feedback voltage resistance	≤ 35 V DC
Protection against overvoltage at the output (OVP)	≤ 30 V DC
Control deviation	< 1 % (change in load, static 10 % ... 90 %)
	< 3 % (Dynamic load change 10 % ... 90 %, 10 Hz)
	< 0.1 % (change in input voltage ±10 %)
Residual ripple	< 40 mV_{PP} (Ripple)
	< 50 mV_{PP} (Noise)
Short-circuit-proof	yes
No-load proof	yes
Output power	192 W
Maximum no-load power dissipation	< 9 W
Power loss nominal load max.	< 24 W
Rise time	≤ 30 ms (U_{OUT} (10 % ... 90 %))
Connection in parallel	yes, for redundancy and increased capacity
Connection in series	no
Fuse protection (secondary side)	electronic

Signal: DC OK

Continuous load current	100 mA

Signal relay 13/14

Default	closed
Digital	30 V AC 30 V DC 100 mA

Connection data

Input

Connection method	Push-in connection
Conductor cross-section, rigid min.	1 mm²
Conductor cross-section, rigid max.	4 mm²
Conductor cross-section flexible min.	1 mm²
Conductor cross-section flexible max.	2.5 mm²
Single conductor/flexible terminal point with ferrule with plastic sleeve, min.	1 mm²
Single conductor/flexible terminal point with ferrule with plastic sleeve, max.	2.5 mm²
Single conductor/flexible terminal point with ferrule without plastic sleeve, min.	1 mm²
Single conductor/flexible terminal point with ferrule without plastic sleeve, max.	2.5 mm²
Conductor cross-section AWG min.	18
Conductor cross-section AWG max.	12
Stripping length	10 mm

Output

Connection method	Push-in connection
Conductor cross-section, rigid min.	1 mm²
Conductor cross-section, rigid max.	4 mm²
Conductor cross-section flexible min.	1 mm²
Conductor cross-section flexible max.	2.5 mm²
Single conductor/flexible terminal point with ferrule with plastic sleeve, min.	0.2 mm²
Single conductor/flexible terminal point with ferrule with plastic sleeve, max.	1.5 mm²
Single conductor/flexible terminal point with ferrule without plastic sleeve, min.	0.2 mm²
Single conductor/flexible terminal point with ferrule without plastic sleeve, max.	1.5 mm²
Conductor cross-section AWG min.	18
Conductor cross-section AWG max.	12
Stripping length	10 mm

Signal

Connection method	Push-in connection
Conductor cross-section, rigid min.	0.2 mm²

Conductor cross-section, rigid max.	1.5 mm²
Conductor cross-section flexible min.	0.2 mm²
Conductor cross-section flexible max.	1.5 mm²
Single conductor/flexible terminal point with ferrule with plastic sleeve, min.	0.2 mm²
Single conductor/flexible terminal point with ferrule with plastic sleeve, max.	1.5 mm²
Single conductor/flexible terminal point with ferrule without plastic sleeve, min.	0.2 mm²
Single conductor/flexible terminal point with ferrule without plastic sleeve, max.	1.5 mm²
Conductor cross-section AWG min.	24
Conductor cross-section AWG max.	16
Stripping length	8 mm

Signaling

Types of signaling	LED
	Floating signal contact

Signal output: LED status indicator

Signalization designation	DC OK
Status display	"DC OK" LED green
Note on status display	U_{OUT} > 21.5 V: LED lights up
Color	green
DC OK	U_{OUT} > 0.9 x U_N (U_N = 24 V DC)
13/14	U_{OUT} > 0.9 x U_N (U_N = 24 V DC)

Electrical properties

Number of phases	1
Insulation voltage input/output	2.4 kV DC (type test)
	1.6 kV DC (routine test)

Product properties

Product type	DC/DC converters
Product family	TRIO POWER
MTBF (IEC 61709, SN 29500)	> 1500000 h (25 °C)
	> 900000 h (40 °C)
	> 400000 h (60 °C)

Insulation characteristics

Protection class	I
Overvoltage category (IEC 62109-1)	II
Degree of pollution	2

Dimensions

Dimensional drawing	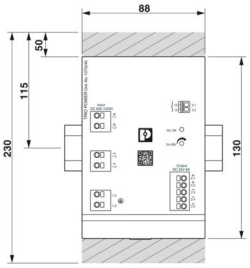
Width	88.5 mm
Height	130 mm
Depth	160 mm

Installation dimensions

Installation distance right/left	0 mm / 0 mm (≤ 40°C)
Installation distance right/left (active)	10 mm / 10 mm (≤ 70 °C)
Installation distance top/bottom	50 mm / 50 mm (≤ 70 °C)
Installation distance top/bottom (active)	50 mm / 50 mm (≤ 70 °C)

Mounting

Mounting type	DIN rail mounting
Assembly note	alignable: horizontally 0 mm (≤ 40 °C) 10 mm (≤ 70 °C), vertically 50 mm
Mounting position	horizontal DIN rail NS 35, EN 60715
With protective coating	no

Material specifications

Flammability rating according to UL 94 (housing / terminal blocks)	V0
Housing material	Metal
Type of housing	Aluminum (AlMg3)
Hood version	Polycarbonate

Environmental and real-life conditions

Ambient conditions

Degree of protection	IP20
Ambient temperature (operation)	-25 °C ... 70 °C (>60°C derating: 1.2%/K)
Ambient temperature (storage/transport)	-40 °C ... 85 °C
Ambient temperature (start-up type tested)	-40 °C
Maximum altitude	≤ 4000 m (> 2000 m, Derating: 10 %/1000 m)
Climatic class	3K3 (in acc. with EN 60721)
Max. permissible relative humidity (operation)	≤ 95 % (at 25 °C, non-condensing)
Shock	18 ms, 30g, in each space direction (according to IEC 60068-2-27)
Vibration (operation)	< 15 Hz, amplitude ±2.5 mm (according to IEC 60068-2-6)
	15 Hz ... 150 Hz, 2.3g, 90 min.

Standards and regulations

Standard - Electrical safety	EN 62109-1:2011
Standard – Safety extra-low voltage	IEC 62109-1:2011 (SELV)
Standard - Safe isolation	DIN VDE 0100-410

Approvals

UL approvals	UL 62109-1:2014

EMC data

Electromagnetic compatibility	Conformance with EMC Directive 2014/30/EU
Low Voltage Directive	Conformance with Low Voltage Directive 2014/35/EC
Noise immunity	EN 61000-6-2:2005

Conducted noise emission

Standards/regulations	EN 55016
	EN 61000-6-4 (Class A)

Noise emission

Standards/regulations	EN 55016
	EN 61000-6-4 (Class A)

Electrostatic discharge

Standards/regulations	EN 61000-4-2

Electrostatic discharge

Contact discharge	4 kV (Test Level 2)
Discharge in air	8 kV (Test Level 3)
Comments	Criterion A

Electromagnetic HF field

Standards/regulations	EN 61000-4-3

Electromagnetic HF field

Frequency range	80 MHz ... 1 GHz
Test field strength	20 V/m (> Test intensity 3)
Frequency range	1 GHz ... 2 GHz
Test field strength	10 V/m (Test Level 3)
Frequency range	2 GHz ... 3 GHz
Test field strength	10 V/m (Test Level 3)
Comments	Criterion A

Fast transients (burst)

Standards/regulations	EN 61000-4-4

Fast transients (burst)

Input	4 kV (Test Level 4 - asymmetrical)
Output	2 kV (Test Level 3 - asymmetrical)

Signal	1 kV (Test Level 3 - asymmetrical)
Comments	Criterion B

Surge voltage load (surge)

Standards/regulations	EN 61000-4-5

Surge voltage load (surge)

Input	3 kV (Test intensity >4 - symmetrical)
	6 kV (Test intensity >4 - asymmetrical)
Output	1 kV (Test Level 3 - symmetrical)
	2 kV (Test Level 3 - asymmetrical)
Signal	1 kV (Test Level 3 - symmetrical)
	2 kV (Test Level 3 - asymmetrical)
Comments	Criterion B

Conducted interference

Standards/regulations	EN 61000-4-6

Conducted interference

Input/Output	asymmetrical
Frequency range	0.15 MHz ... 80 MHz
Comments	Criterion A
Voltage	10 V (Test Level 3)

Voltage dips

Standards/regulations	EN 61000-4-11

Emitted interference

Standards/regulations	EN 61000-6-4
Radio interference voltage in acc. with EN 55011	EN 55011 (EN 55022) Class A industrial area of application
Emitted radio interference in acc. with EN 55011	EN 55011 (EN 55022) Class A industrial area of application

Criteria

Criterion A	Normal operating behavior within the specified limits.
Criterion B	Temporary impairment to operational behavior that is corrected by the device itself.

Drawings

Dimensional drawing

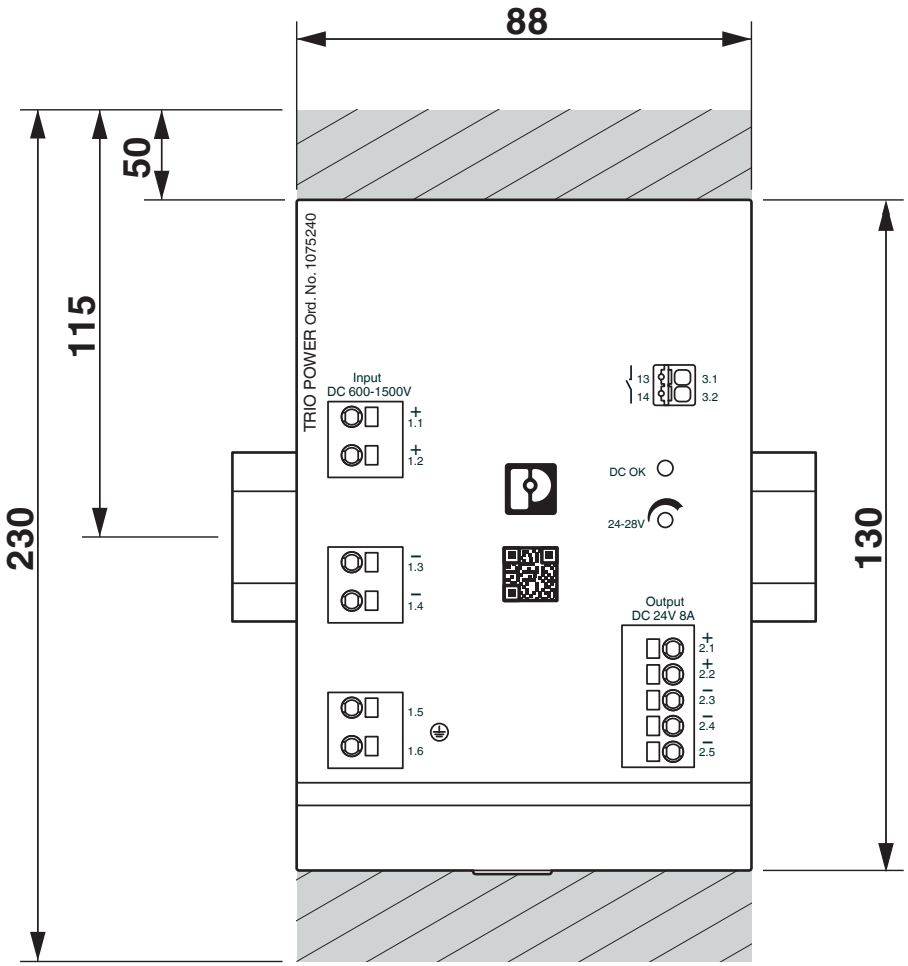

Dimensional drawing

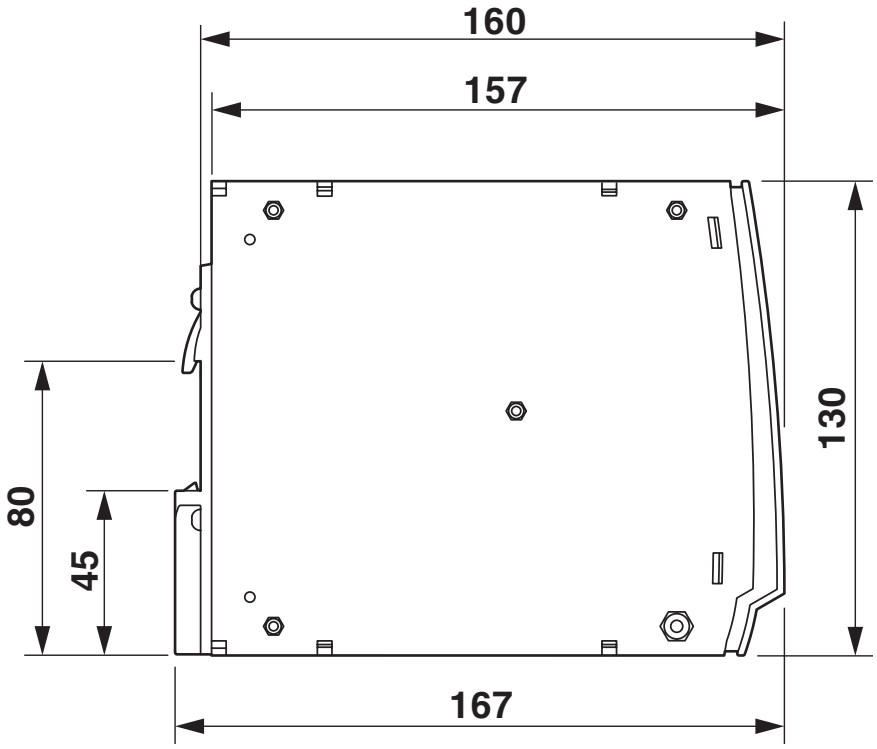

Connection diagram

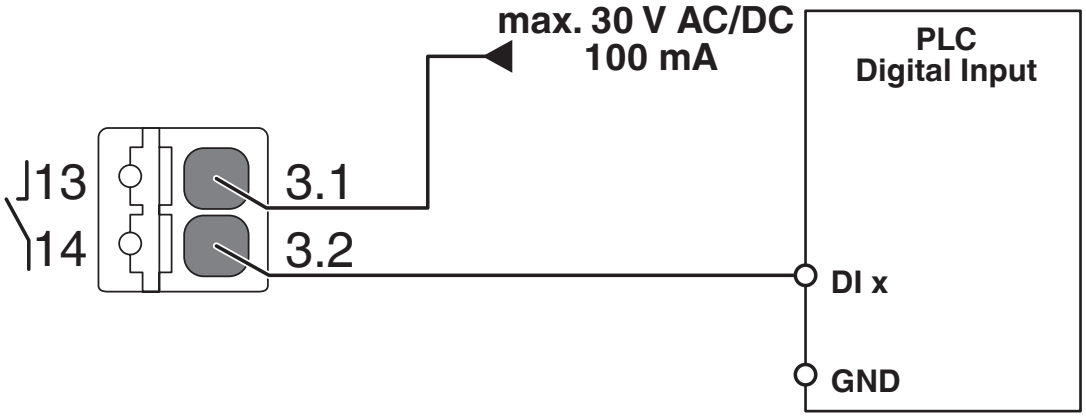

Diagram

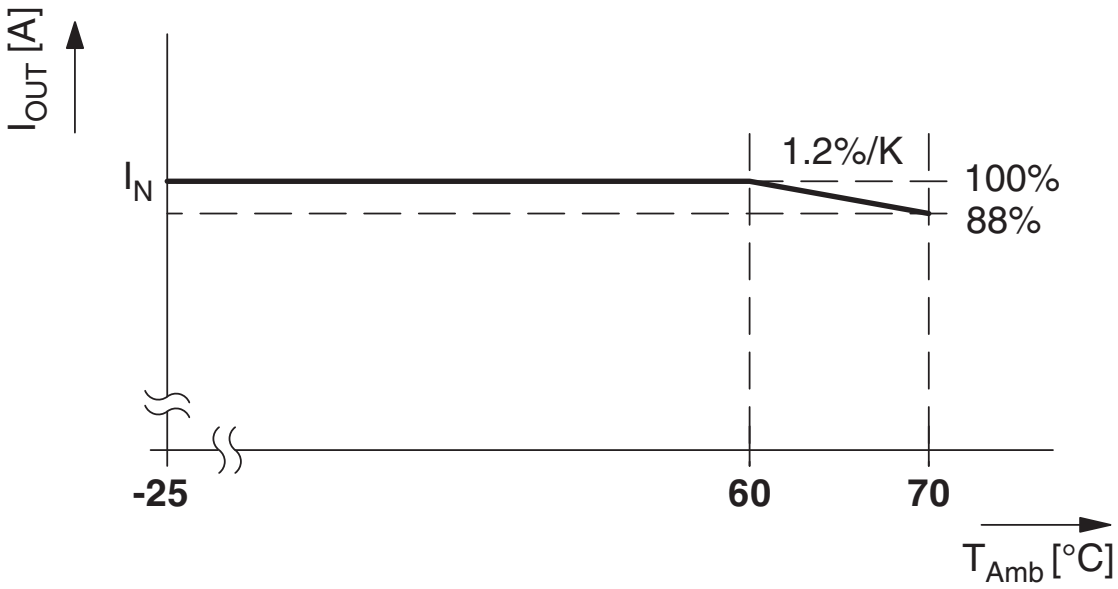

Block diagram

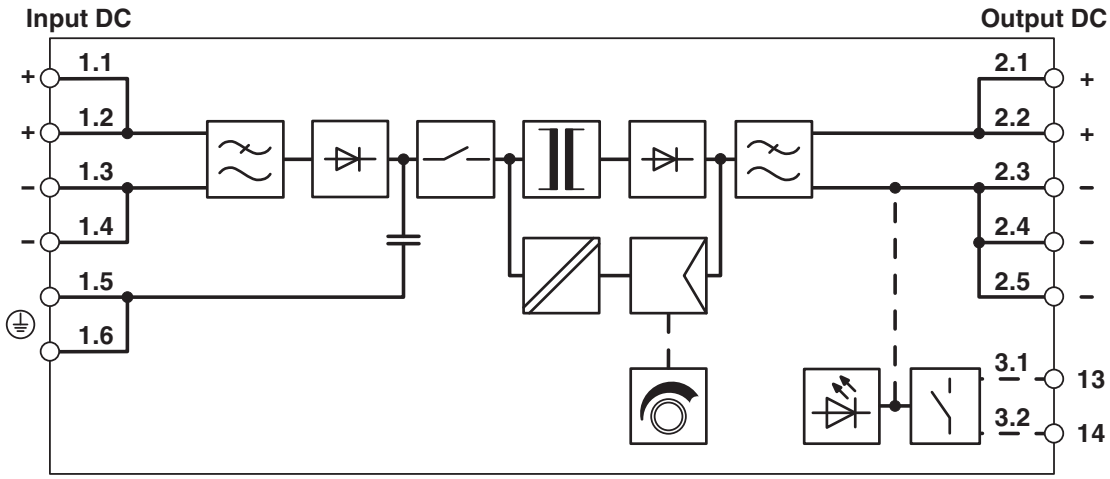

Approvals

To download certificates, visit the product detail page: https://www.phoenixcontact.com/gb/products/1075240

cUL Recognized
Approval ID: FILE E 476951

UL Recognized
Approval ID: FILE E 476951

IECEE CB Scheme
Approval ID: US-33734-UL

EAC
Approval ID: RU S-DE.BL08.W.00764

EAC
Approval ID: KZ7500651 0101 12535

Classifications

ECLASS

ECLASS-13.0	27040701
ECLASS-15.0	27040701

ETIM

ETIM 10.0	EC002540

UNSPSC

UNSPSC 21.0	39121000

Environmental product compliance

EU RoHS

Fulfills EU RoHS substance requirements	Yes
Exemption	6(a)-I, 6(c), 7(a), 7(a)-I, 7(c)-I

China RoHS

Environment friendly use period (EFUP)	EFUP-25
	An article-related China RoHS declaration table can be found in the download area for the respective article under "Manufacturer declaration". For all articles with EFUP-E, no China RoHS declaration table issued and required.

EU REACH SVHC

REACH candidate substance (CAS No.)	Lead(CAS: 7439-92-1)

EF3.1 Climate Change

CO2e kg	53.72 kg CO2e

Phoenix Contact 2026 © - all rights reserved
https://www.phoenixcontact.com

PHOENIX CONTACT Ltd
Halesfield 13, Telford
Shropshire, TF7 4PG
01952 681700
info@phoenixcontact.co.uk