QUINT4-UPS/1AC/1AC/500VA/USB - Uninterruptible power supply

1067327

https://www.phoenixcontact.com/gb/products/1067327

Please be informed that the data shown in this PDF document is generated from our online catalog. Please find the complete data in the user documentation. Our general terms of use for downloads are valid.

CRA-READY



QUINT AC UPS, IQ Technology, DIN rail mounting, input: 120 V AC / 230 V AC, output: 120 V AC / 230 V AC / 500 VA. output: 120 V AC / 500 VA. output: 230 V AC / 500 VA.. The product is being prepared for compliance with the Cyber Resilience Act (CRA).

Product description

The uninterruptible power supplies for industrial AC applications ensure maximum failsafe performance and system availability in the event of voltage failures or fluctuations. The AC UPS delivers a pure sine curve at the output and supplies AC loads with up to 500 VA without interruption. Choose the ideal AC UPS with appropriate battery module for your application.

Your advantages

- Smooth transition, thanks to the pure sine curve: the sine generated in battery operation is synchronous with the mains previously used for supply
- Universal use thanks to modular combination of UPS module and battery module (VRLA and WTR)
- USB interface for connection to higher-level controllers such as industrial PCs
- Startup from the energy storage system possible, even without mains input

ELEKTROGERÄTE RÜCKNAHME

Commercial data

Item number	1067327

Packing unit	1 pc
Minimum order quantity	1 pc
Sales key	CMUI15
Product key	CMUI15
GTIN	4055626736082
Weight per piece (including packing)	3,088 g
Weight per piece (excluding packing)	2,724 g
Customs tariff number	85371091
Country of origin	DE

Technical data

Notes

Note on application

Note on application	As things stand now, we are preparing the product so that, as of December 11, 2027, it will comply with the requirements of the EU Cyber Resilience Act (CRA) based on the information currently available regarding the CRA.

Input data

Input voltage	120 V AC
	230 V AC
Input voltage range	90 V AC ... 264 V AC
Nominal input voltage range	100 V AC ... 240 V AC
Typical national grid voltage	120 V AC
Voltage type of supply voltage	AC
Frequency range (f_N)	45 Hz ... 65 Hz
Permissible backup fuse	max. 25 A
Current consumption	6.9 A (100 V AC)
	2.86 A (240 V AC)
	19 A (24 V DC)

Output data

Efficiency	> 97 % (100 % load, with charged energy storage)
	~ 87 % (100 % load)
Apparent power	500 VA
Real power	400 W
Power factor	0.83
Crest factor	2.8
Switch-over time	< 10 ms
UPS classification	VFD-SS-311
Connection in parallel	no
Connection in series	no
Overload capability Mains operation	in accordance with internal fuse
Overload capability Battery operation	105 % (permanent)
	120 % ... 150 % (20 s / 5 s, then shutdown)

Mains operation

Output voltage	120 V AC
	230 V AC
Nominal output current (I_N)	4.17 A (120 V AC)
	2.17 A (230 V AC)
Maximum no-load power dissipation	typ. 9 W (120 V AC)

	typ. 10 W (230 V AC)
Power loss nominal load max.	typ. 10 W (120 V AC)
	typ. 11 W (230 V AC)
Nominal output frequency	60 Hz ±5 Hz
	50 Hz ±5 Hz
Output fuse	10 A 400 V gRL

Battery operation

Output voltage	120 V AC ±2 %
	230 V AC ±2 %
Form of output voltage	Pure sine
Maximum no-load power dissipation	approx. 23 W (120 V AC)
	approx. 24 W (230 V AC)
Power loss nominal load max.	approx. 57 W (120 V AC)
	approx. 54 W (230 V AC)
Nominal output frequency	60 Hz
	50 Hz
	±5 % (grid-guided)
	±0.5 % (self-guided)
Total harmonic distortion factor (THD)	< 3 % (linear load)
	< 8 % (non-linear load)
Electronic current limitation	> 2,5 x I_N (> 200 ms)

Energy storage

Input

Input voltage	24 V DC
Deep discharge protection	20 V DC ... 24 V DC (can be parameterized)
Nominal capacity range	3.4 Ah ... 200 Ah (5x 40 Ah)
Charging current	max. 5 A
End-of-charge voltage	24 V DC ... 31 V DC (temperature compensated)

General

Battery technology	VRLA, VRLA-WTR, LI-ION (see section: Ordering data)
Charge characteristic curve	IU_0U
Permissible backup fuse	50 A

Connection data

Input

Position	1.x

Conductor connection

Connection method	Screw connection
flexible	0.2 mm² ... 4 mm²

flexible with ferrule without plastic sleeve	0.2 mm² ... 4 mm²
flexible with ferrule with plastic sleeve	0.2 mm² ... 4 mm²
AWG	30 ... 10
Stripping length	8 mm
Tightening torque (EU)	0.5 Nm ... 0.6 Nm
Drive form screw head	Slotted L

Output

Position	2.x

Conductor connection

Connection method	Screw connection
rigid	0.2 mm² ... 6 mm²
flexible	0.2 mm² ... 4 mm²
flexible with ferrule without plastic sleeve	0.2 mm² ... 4 mm²
flexible with ferrule with plastic sleeve	0.2 mm² ... 4 mm²
AWG	30 ... 10
Stripping length	8 mm
Tightening torque (EU)	0.5 Nm ... 0.6 Nm
Drive form screw head	Slotted L

Signal

Position	3.x

Conductor connection

Connection method	Screw connection
rigid	0.2 mm² ... 1.5 mm²
flexible	0.2 mm² ... 1.5 mm²
flexible with ferrule without plastic sleeve	0.2 mm² ... 1.5 mm²
flexible with ferrule with plastic sleeve	0.2 mm² ... 1.5 mm²
AWG	30 ... 12
Stripping length	8 mm
Tightening torque (EU)	0.5 Nm ... 0.6 Nm
Drive form screw head	Slotted L

Battery

Position	4.x

Conductor connection

Connection method	Screw connection
rigid	0.2 mm² ... 6 mm²
flexible	0.2 mm² ... 4 mm²
flexible with ferrule without plastic sleeve	0.2 mm² ... 4 mm²
flexible with ferrule with plastic sleeve	0.2 mm² ... 4 mm²
AWG	30 ... 10

Stripping length	8 mm
Tightening torque (EU)	0.5 Nm ... 0.6 Nm
Drive form screw head	Slotted L

Interfaces

Interface	USB (Modbus/RTU)
Number of interfaces	1
Connection method	MINI-USB Type B
Connection marking	5.1
Locking	Screw
Transmission physics	USB 2.0
Maximum cable length	3 m
Electrical isolation	yes

Signaling

Signal input Bat.-Start

Signalization designation	Bat.-Start
Position	3.x
Position marking	3.6 (Bat.-Start 230 V), 3.7 (Bat.-Start 120 V)
Low signal	Connection to SGnd with < 2.7 kΩ
High signal	Open (> 200 kΩ between Bat.-Start and SGnd)

Signal input Remote

Signalization designation	Remote
Position	3.x
Position marking	3.8 (Remote)
Low signal	Connection to SGnd with < 2.7 kΩ
High signal	Open (> 35 kΩ between Remote and SGnd)

Signal output Alarm

Position	3.x
Signalization designation	Alarm
Position marking	3.1 (Alarm)
Switching output	Transistor output, active
Output voltage	24 V
Continuous load current	≤ 20 mA
LED status indicator	red

Signal output Battery Mode

Position	3.x
Signalization designation	Bat.-Mode
Position marking	3.2 (Bat.-Mode)
Switching output	Transistor output, active
Output voltage	24 V

Continuous load current	≤ 20 mA
LED status indicator	yellow

Signal output AC OK

Position	3.x
Signalization designation	AC OK
Position marking	3.3 (AC OK)
Switching output	Transistor output, active
Output voltage	24 V
Continuous load current	≤ 20 mA
LED status indicator	green

Signal output Ready

Position	3.x
Signalization designation	Ready
Position marking	3.4 (Ready)
Switching output	Transistor output, active
Output voltage	24 V
Continuous load current	≤ 20 A
LED status indicator	green

Signal output P > P_N

Position	3.x
Signalization designation	P>P_n
Position marking	3.5 (P>Pn)
Switching output	Transistor output, active
Output voltage	24 V
Continuous load current	≤ 20 mA

Signal ground SGnd

Connection labeling	3.9
Function	Signal ground
Reference potential	For signal inputs and signal outputs

Electrical properties

Number of phases	1

Product properties

Product type	AC UPS
Product family	QUINT AC UPS
MTBF (IEC 61709, SN 29500)	445469 h (40 °C)
Special properties	The product is being prepared for compliance with the Cyber Resilience Act (CRA)

Insulation characteristics

Protection class	I
Overvoltage category	II
Pollution degree	3 (≤ 130 V AC)
	2 (> 200 V AC)

Dimensions

Item dimensions

Width	180 mm
Height	130 mm
Depth	125 mm

Installation dimensions

Installation distance right/left	0 mm / 0 mm
Installation distance top/bottom	50 mm / 50 mm

Mounting

Mounting type	DIN rail mounting

Material specifications

Housing material	Metal

Environmental and real-life conditions

Ambient conditions

Degree of protection	IP20
Ambient temperature (operation)	-25 °C ... 60 °C (> 50 °C: 2,5 % / K)
Ambient temperature (storage/transport)	-40 °C ... 85 °C
Maximum altitude	≤ 3000 m (> 2000 m: 0,6 % / 100 m)
Max. permissible relative humidity (operation)	≤ 95 %
Shock	20g in all directions (EN 60068-2-27)
Vibration (operation)	5 Hz ... 100 Hz, 0.7g (EN 60068-2-6)

Standards and regulations

Uninterruptible power supply systems

Standard designation	Uninterruptible power supply systems
Standards/specifications	EN 62040-1

Approvals

UL

Identification	UL/C-UL Recognized UL 1778

EMC data

Electromagnetic compatibility	Conformance with EMC Directive 2014/30/EU

Low Voltage Directive	Conformance with Low Voltage Directive 2014/35/EC
Interference emission	Noise emission in accordance with EN 62040-2
Noise immunity	Immunity in accordance with EN 62040-2

Electrostatic discharge

Standards/regulations	EN 61000-4-2

Electrostatic discharge

Contact discharge	± 6 kV
Discharge in air	± 8 kV
Comments	Criterion A

Electromagnetic HF field

Standards/regulations	EN 61000-4-3

Electromagnetic HF field

Frequency range	80 MHz ... 6 GHz
Test field strength	10 V/m
Comments	Criterion A

Fast transients (burst)

Standards/regulations	EN 61000-4-4

Fast transients (burst)

Input	± 2 kV
	± 2 kV
Output	± 2 kV
Signal	± 2 kV
	± 2 kV (USB)
Comments	Criterion A (B for USB)

Surge voltage load (surge)

Standards/regulations	EN 61000-4-5

Surge voltage load (surge)

Input/Output	± 1 kV (symmetrical)
	± 2 kV (asymmetrical)
Signal	1 kV (asymmetrical)
Comments	Criterion A
Input/Output	± 1 kV (symmetrical)
	± 2 kV (asymmetrical)

Conducted interference

Standards/regulations	EN 61000-4-6

Conducted interference

Frequency range	0.15 MHz ... 80 MHz

Signal	1 kV (asymmetrical)
Comments	Criterion A

Power frequency magnetic field

Standards/regulations	EN 61000-4-8
Frequency	50 Hz
Signal	30 A/m
Comments	Criterion A

Criteria

Criterion A	Normal operating behavior within the specified limits.
Criterion B	Temporary impairment to operational behavior that is corrected by the device itself.

Drawings

Diagram

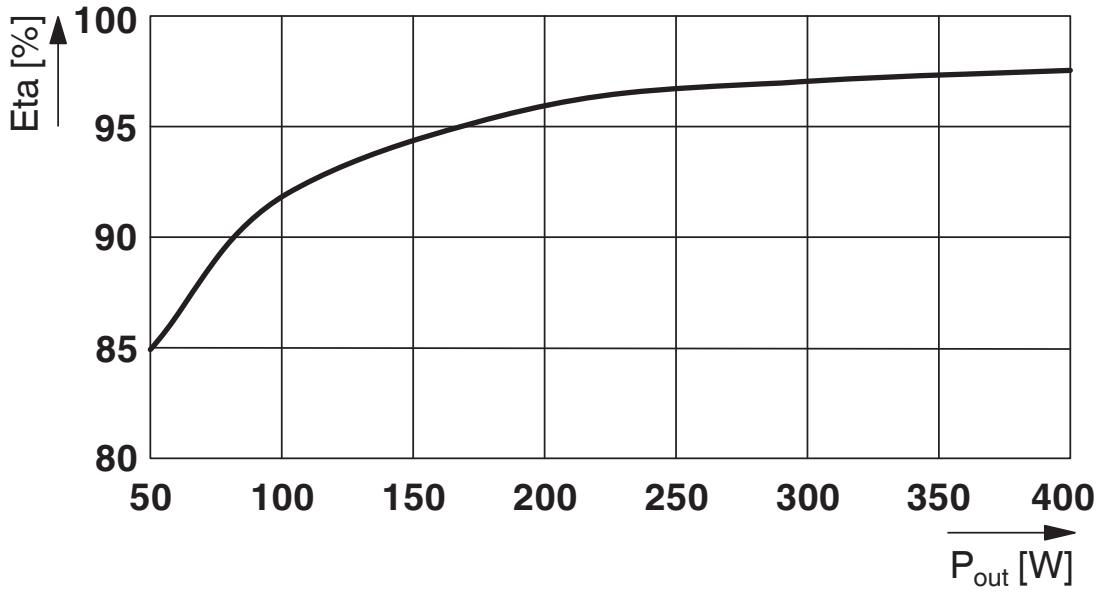

Efficiency (normal operation)

Diagram

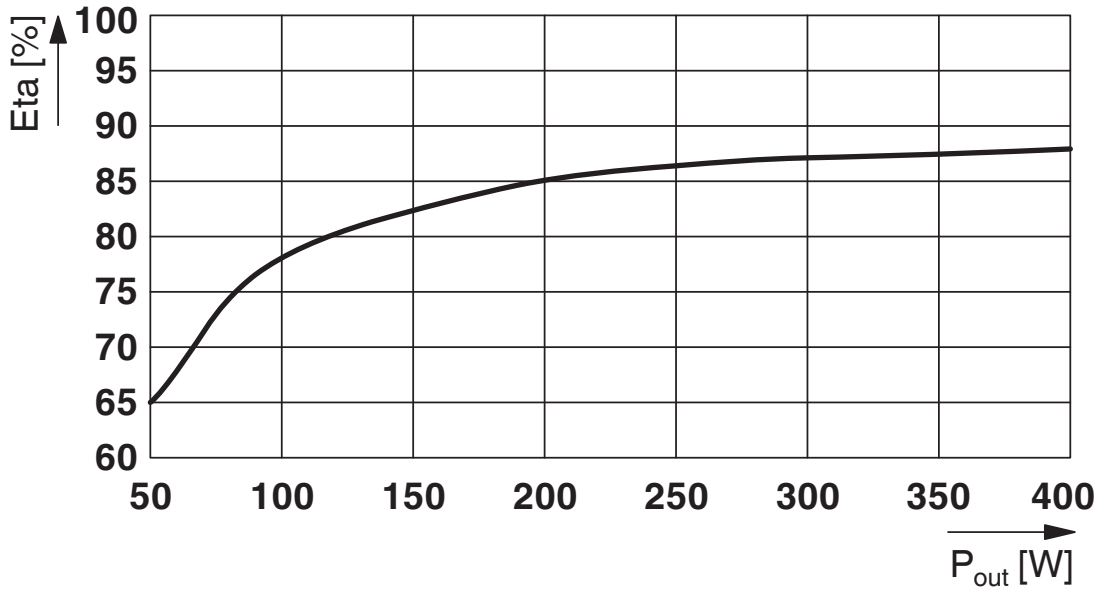

Efficiency (battery operation)

Block diagram

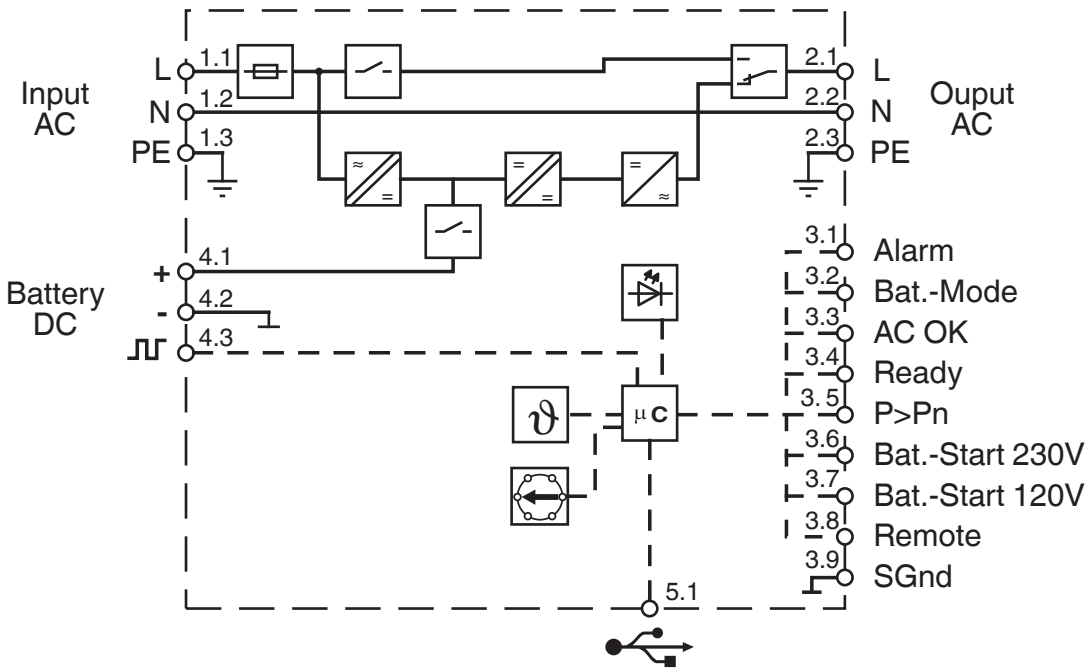

Block diagram

Graphic

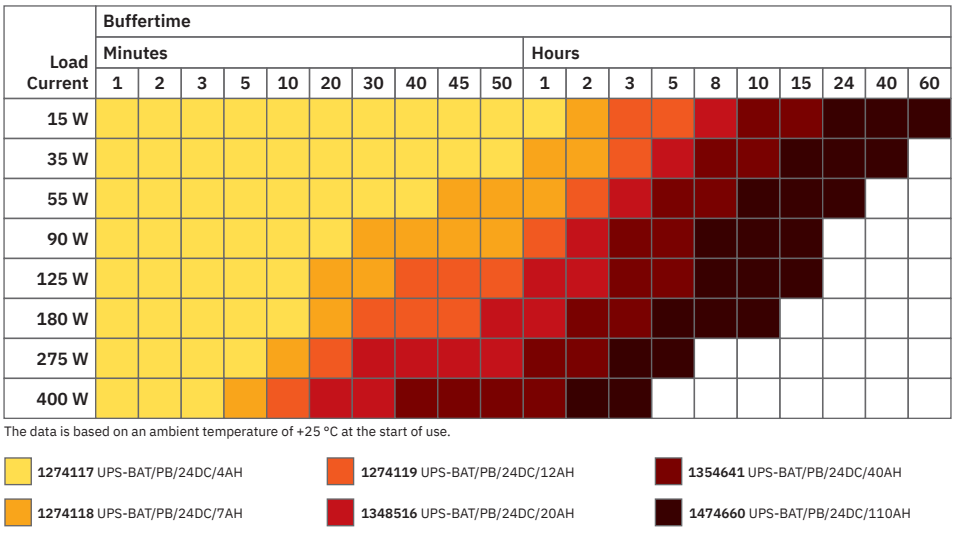

Buffer times for QUINT AC UPS 500 VA for Pb battery module

Graphic

Load Current	Buffertime																
	Minutes										Hours						
	1	2	3	5	10	20	30	40	45	50	1	2	3	5	8	10	15
15 W																	
35 W																2x	
55 W															2x		
90 W														2x			
125 W													2x	2x			
180 W													2x				
275 W												2x					
400 W											2x						

2x: In this case, two battery modules of the same capacity are required. The data is based on an ambient temperature of +25 °C at the start of use.

2320416 UPS-BAT/VRLA-WTR/24DC/13AH

2320429 UPS-BAT/VRLA-WTR/24DC/26AH

Buffer times for QUINT AC UPS 500 VA for VRLA-WTR battery module

Approvals

To download certificates, visit the product detail page: https://www.phoenixcontact.com/gb/products/1067327

IECEE CB Scheme
Approval ID: DK-95944-UL

cULus Recognized
Approval ID: FILE E 342453

EAC
Approval ID: RU-DE.B.00184/20

KC
Approval ID: R-R-PCK-1067327

DNV
Approval ID: TAA00000BM

cULus Recognized
Approval ID: FILE E 342453

IECEE CB Scheme
Approval ID: DK-95944-UL

EAC
Approval ID: RU-DE.B.00184/20

KC
Approval ID: R-R-PCK-1067327

DNV
Approval ID: TAA00000BM

UL Recognized
Approval ID: FILE E 359066

cUL Recognized
Approval ID: FILE E 359066

cUL Recognized
Approval ID: FILE E 359066

UL Recognized
Approval ID: FILE E 359066

Classifications

ECLASS

ECLASS-13.0	27040705
ECLASS-15.0	27040705

ETIM

ETIM 10.0	EC000382

UNSPSC

UNSPSC 21.0	39121000

Environmental product compliance

EU RoHS

Fulfills EU RoHS substance requirements	Yes
Exemption	6(c)

China RoHS

Environment friendly use period (EFUP)	EFUP-50
	An article-related China RoHS declaration table can be found in the download area for the respective article under "Manufacturer declaration". For all articles with EFUP-E, no China RoHS declaration table issued and required.

EU REACH SVHC

REACH candidate substance (CAS No.)	Lead(CAS: 7439-92-1)
SCIP	f227974b-e780-4747-843e-676d1b6d6151

EF3.1 Climate Change

CO2e kg	116.593 kg CO2e

Phoenix Contact 2026 © - all rights reserved
https://www.phoenixcontact.com

PHOENIX CONTACT Ltd
Halesfield 13, Telford
Shropshire, TF7 4PG
01952 681700
info@phoenixcontact.co.uk